[1] SJ-WS320T DOOR

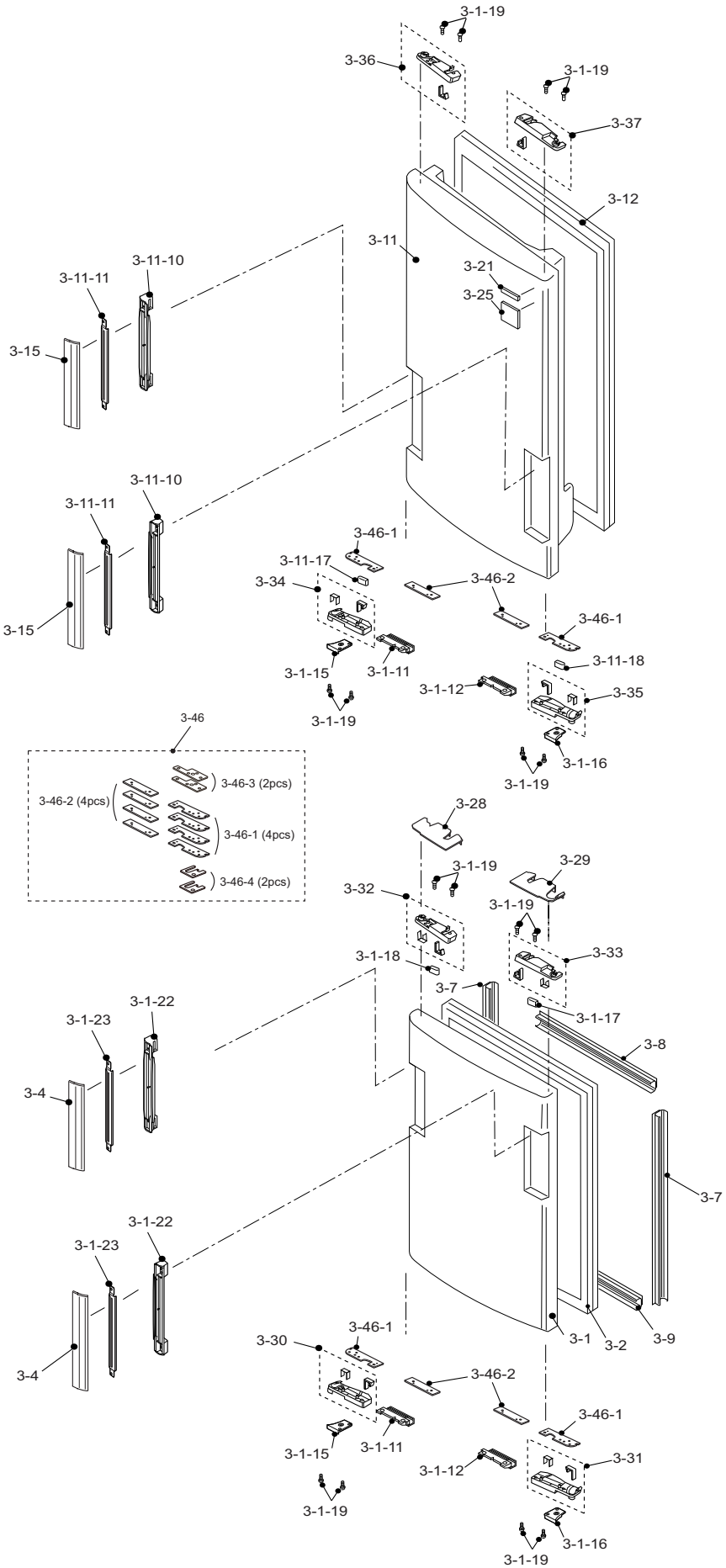

[2] SJ-WS320T MECHANICAL PARTS

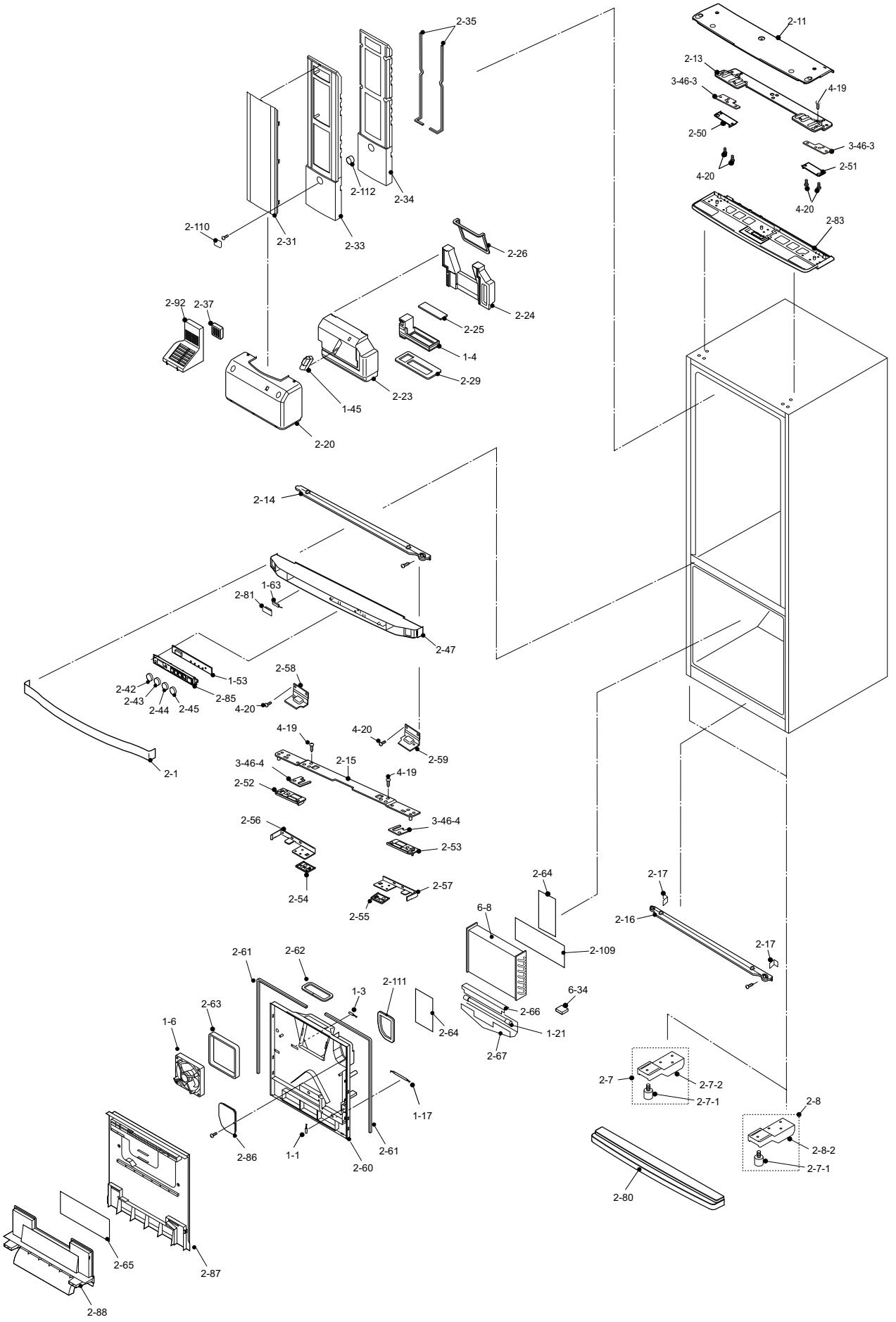

[3] SJ-WS320T ATTACHMENT PARTS

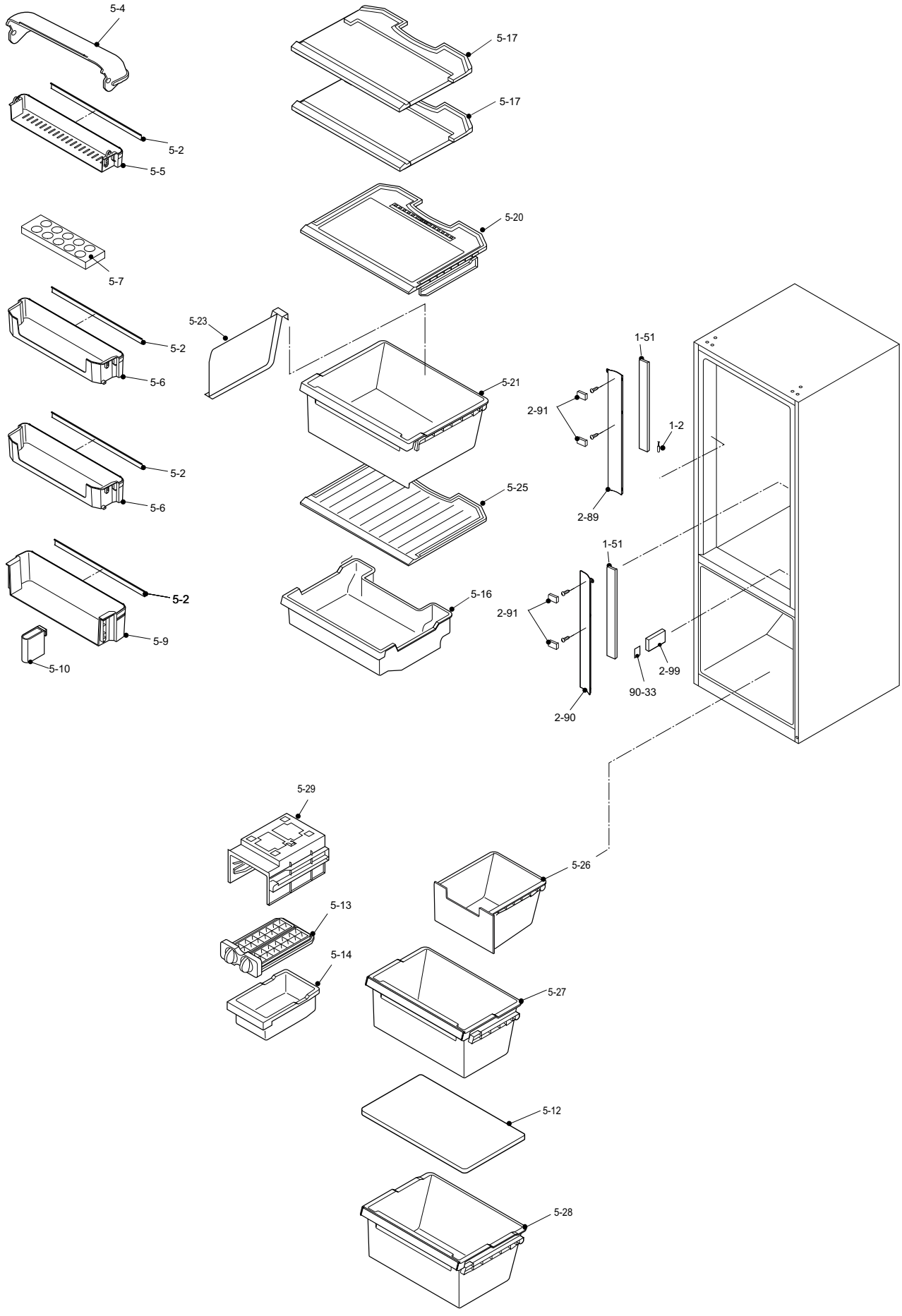
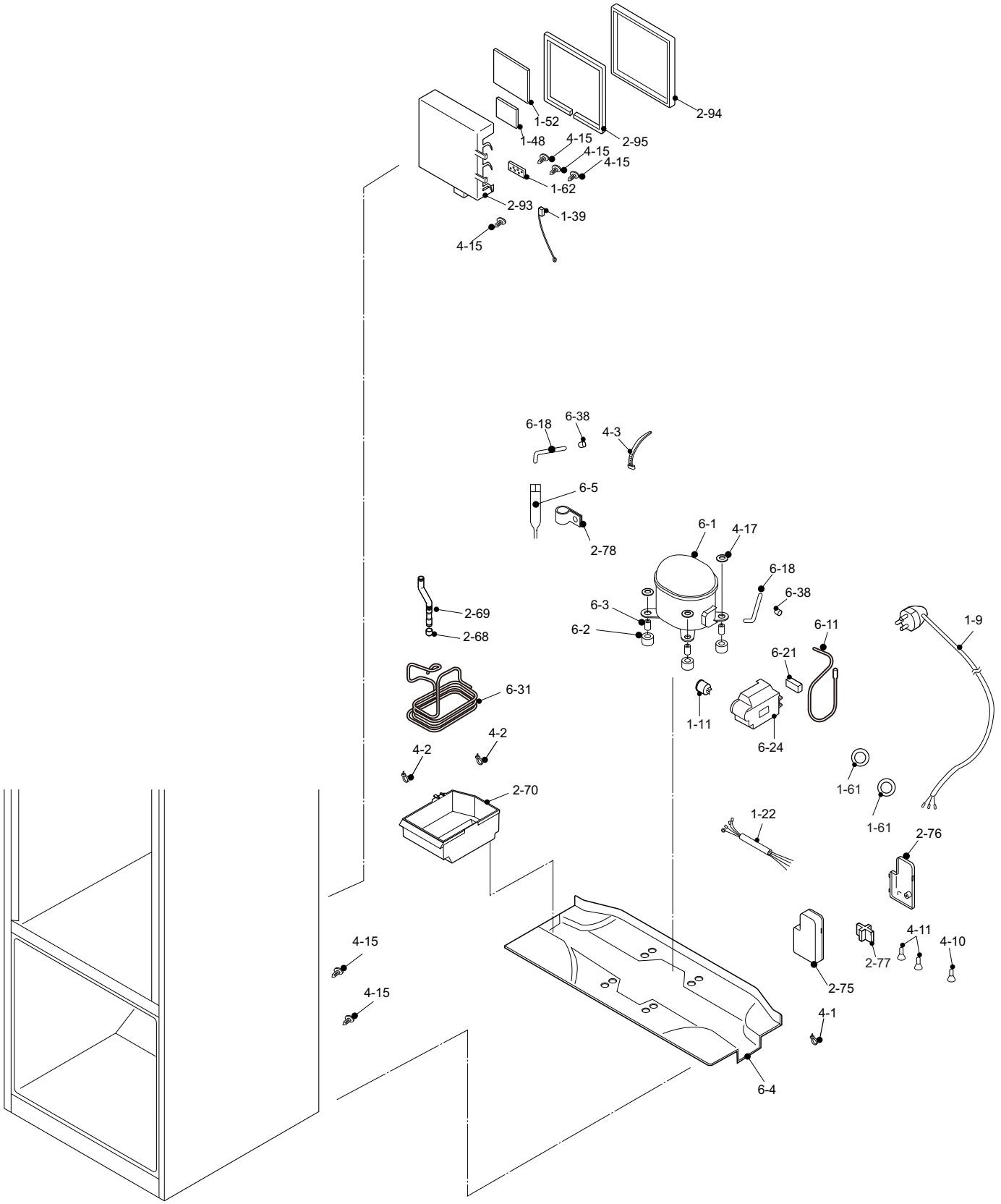
[4] SJ-WS320T CYCLE PARTS