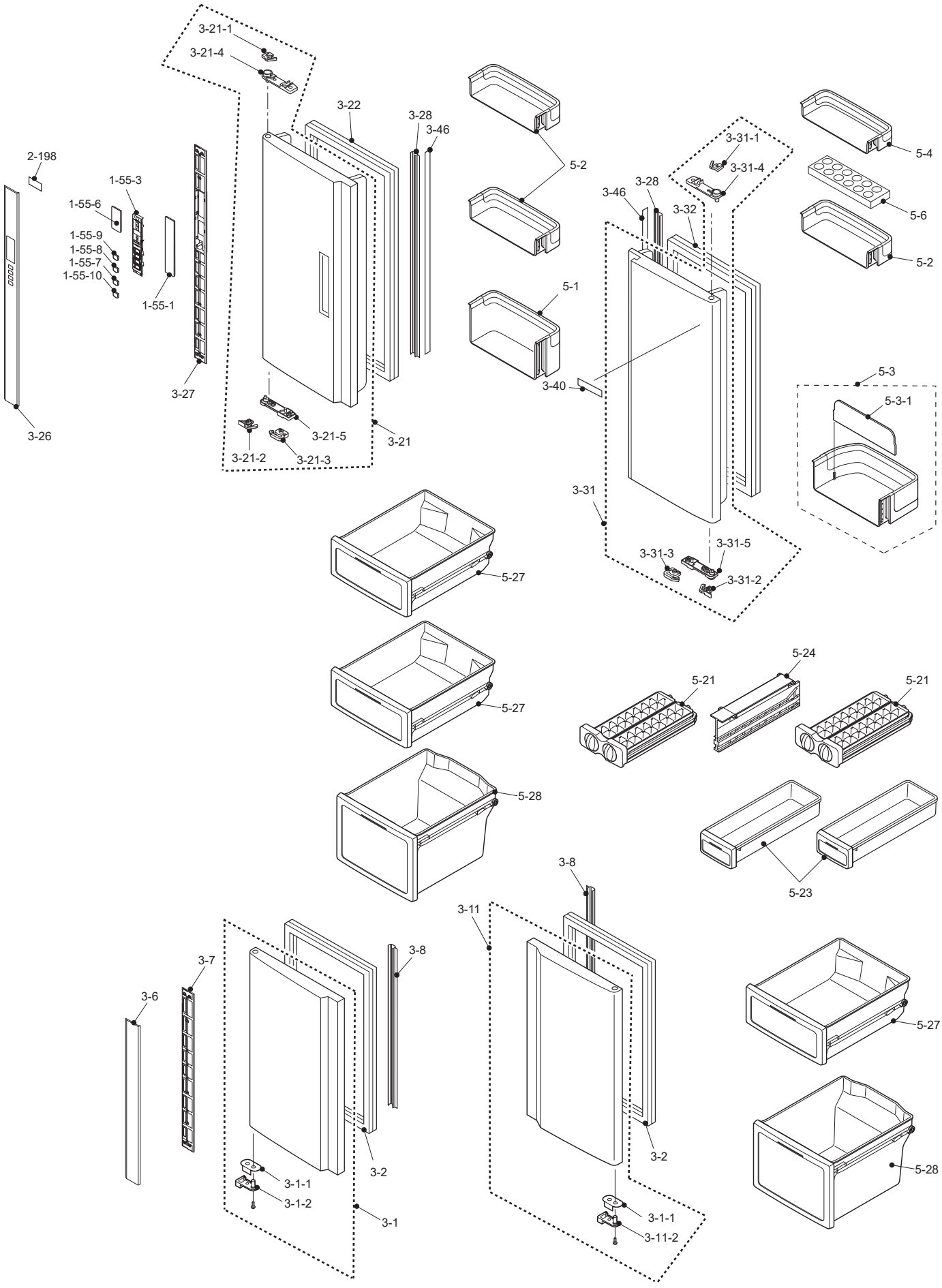
3-21-1
3-21-4
3-22
3-28
3-46
2-198
1-55-3
1-55-6
1-55-9
1-55-8
1-55-7
1-55-10
1-55-1
3-27
3-26
3-21-5
3-21-2
3-21-3
3-21
5-2
5-1
3-40
3-31-1
3-31-4
3-46
3-28
3-32
3-31
3-31-3
3-31-5
3-31-2
5-4
5-6
5-2
5-3
5-3-1
5-27
5-27
5-28
5-24
5-21
5-21
5-23
3-8
3-11
3-7
3-6
3-8
3-2
3-1-1
3-1-2
3-1
3-2
3-1-1
3-11-2
5-27
5-28

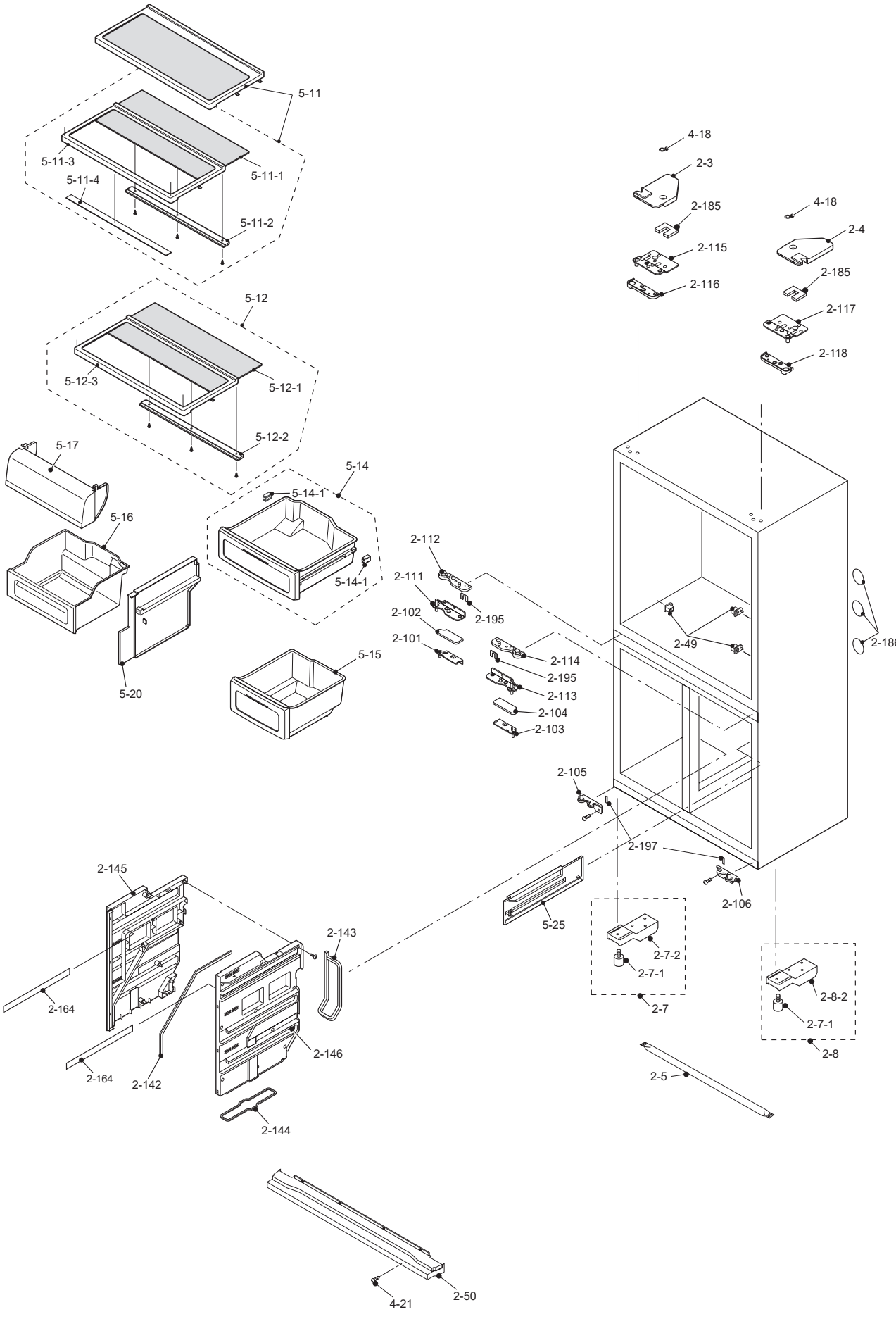
5-11
5-11-3
5-11-1
5-11-4
5-11-2
5-12
5-12-3
5-12-1
5-12-2
5-17
5-14
5-14-1
5-16
5-14-1
5-20
5-15
2-112
2-111
2-195
2-102
2-101
2-114
2-195
2-113
2-104
2-103
4-18
2-3
2-185
2-115
2-116
4-18
2-4
2-185
2-117
2-118
2-49
2-186
2-105
2-197
2-106
5-25
2-7-2
2-7-1
2-7
2-8-2
2-7-1
2-8
2-5
2-145
2-143
2-164
2-164
2-142
2-146
2-144
4-21
2-50

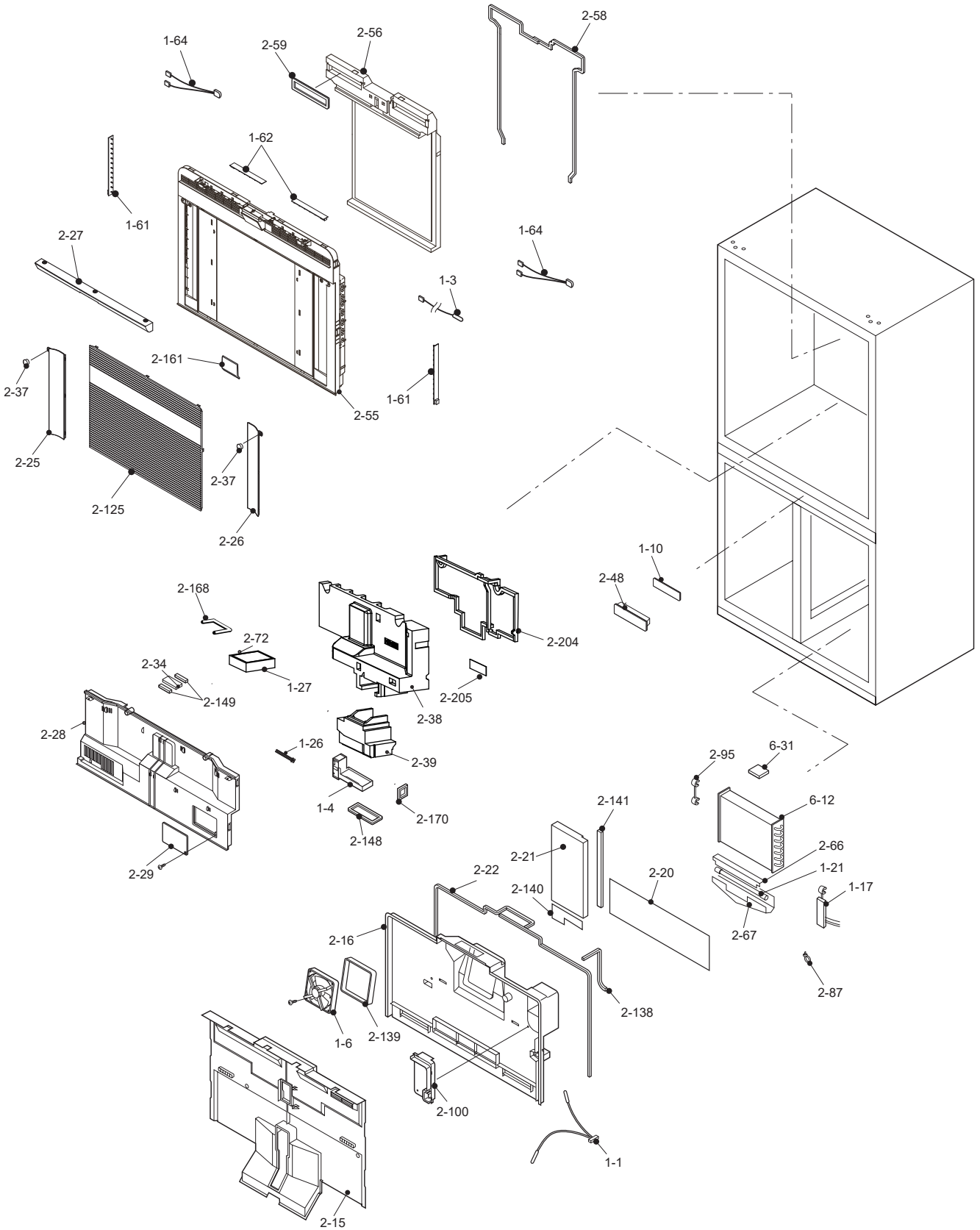
2-58
1-64
2-59
2-56
1-62
1-61
2-27
1-64
1-3
2-161
2-37
1-61
2-55
2-25
2-37
2-125
2-26
1-10
2-48
2-168
2-72
2-204
2-34
1-27
2-149
2-205
2-38
2-28
1-26
2-39
2-95
6-31
1-4
2-170
2-141
6-12
2-148
2-66
2-21
1-21
2-29
2-22
2-20
1-17
2-140
2-67
2-16
2-87
2-138
1-6
2-139
2-100
1-1
2-15

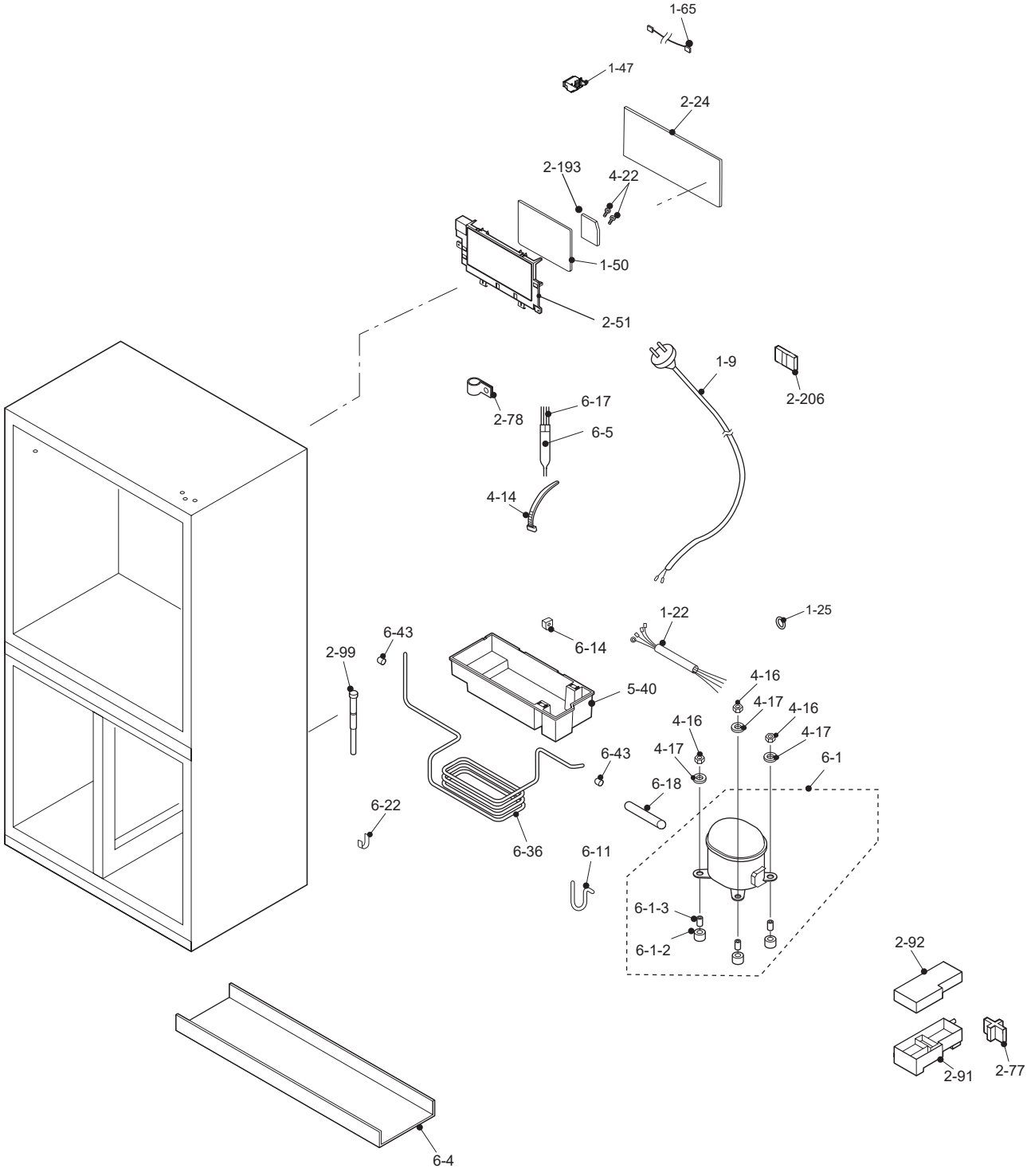
1-65
1-47
2-24
2-193
4-22
1-50
2-51
1-9
2-206
2-78
6-17
6-5
4-14
1-22
1-25
6-43
6-14
2-99
5-40
4-16
4-17
4-16
4-16
4-17
4-17
6-1
6-43
6-18
6-22
6-36
6-11
6-1-3
6-1-2
2-92
2-91
2-77
6-4