999016105

PANNEL.G/N
07/10/98

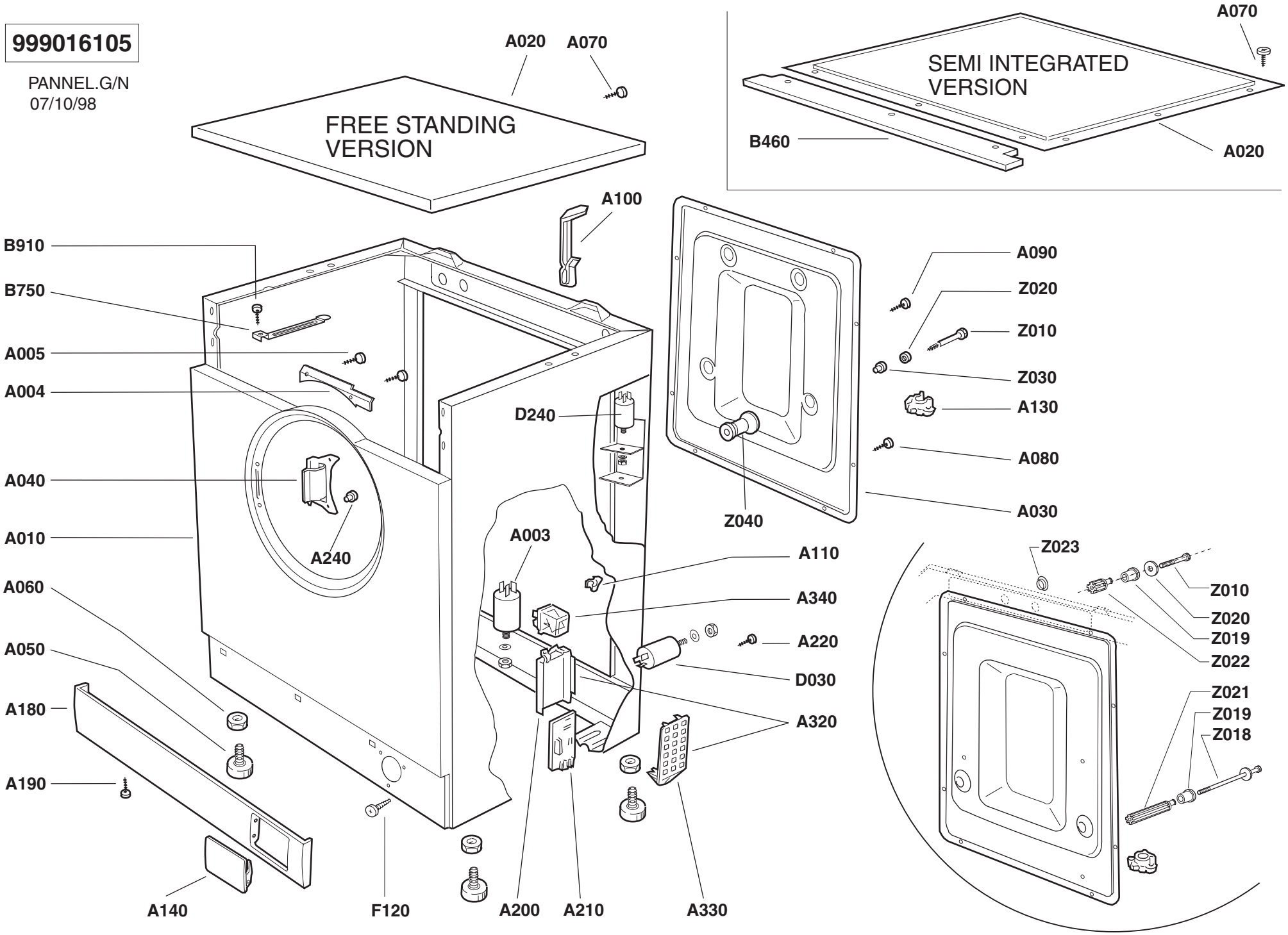

999016116

FRONTAL.AC
09/10/98

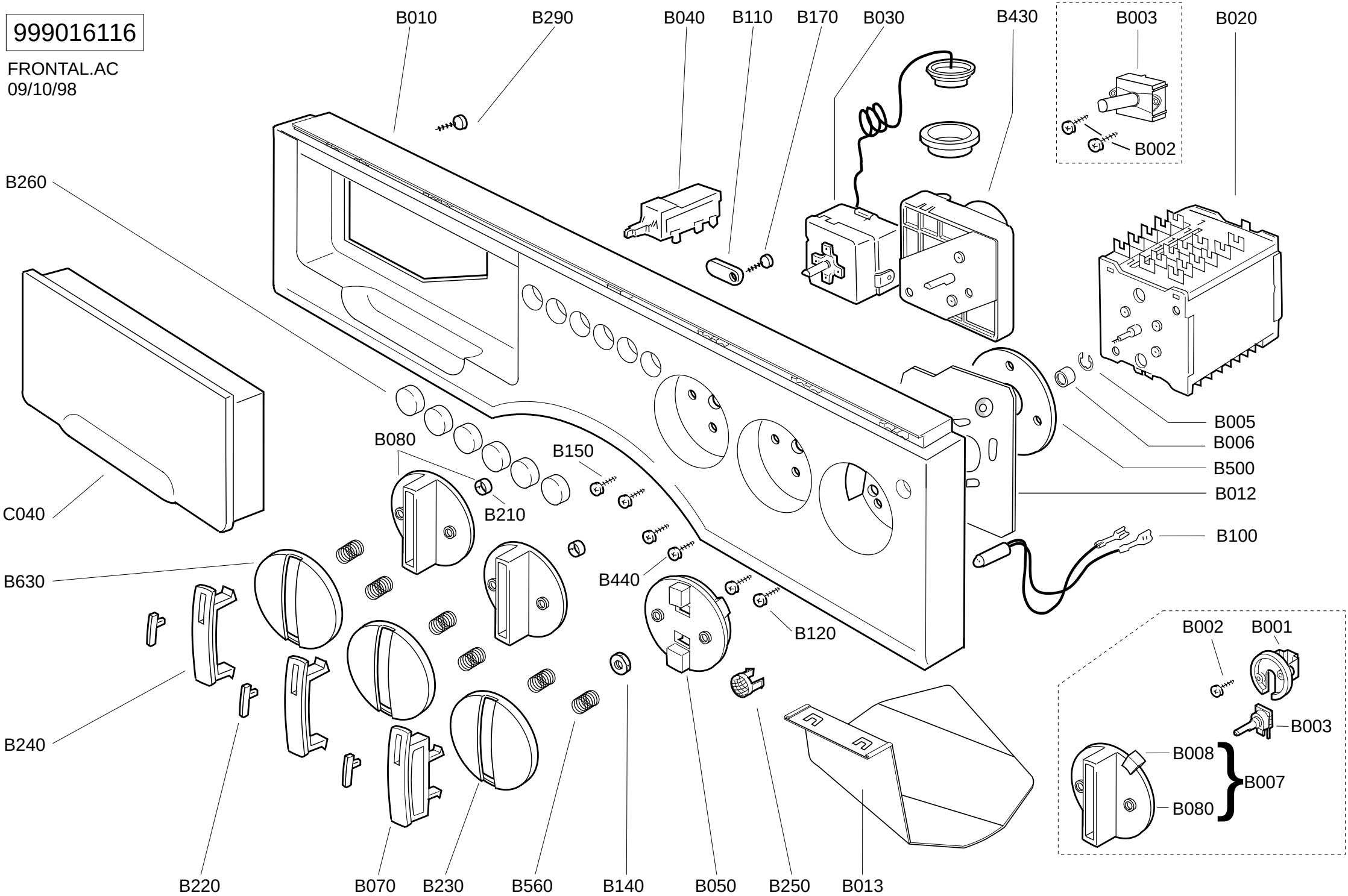

999016190

STANDARD CF - LA
24/07/2000

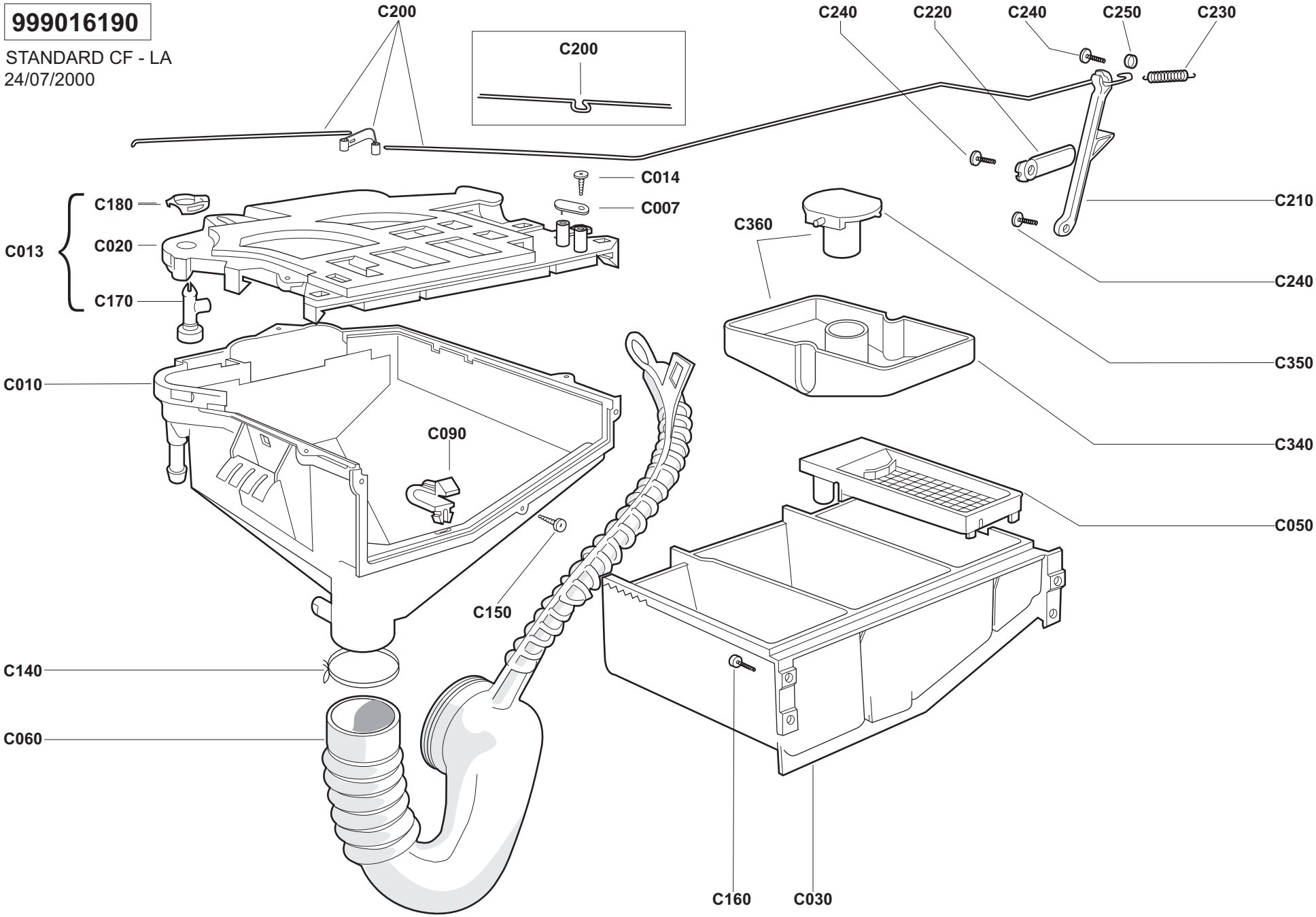

999016195

LBCF - AF - PRECAR
30/10/98

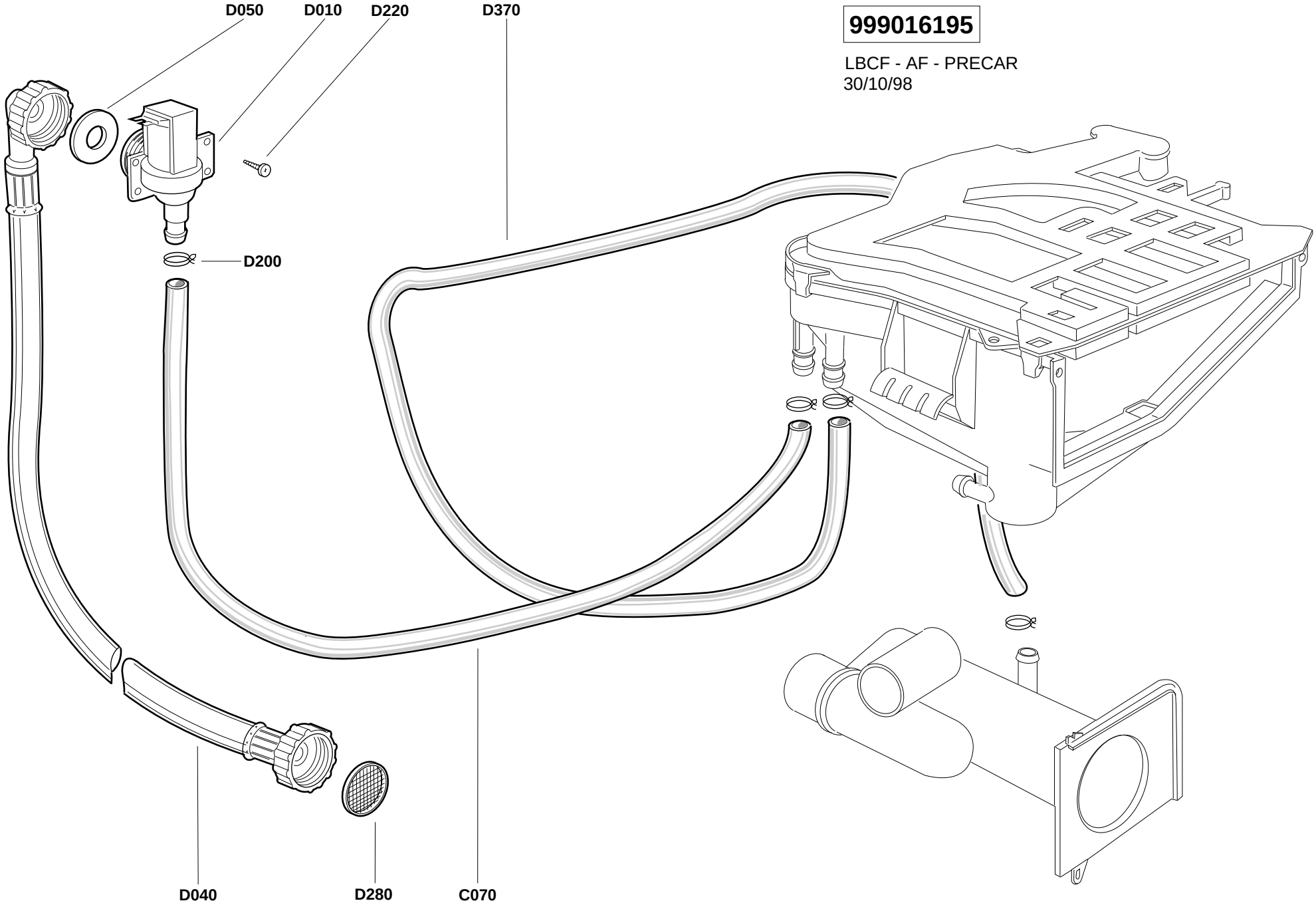

999027202

LBCF - STANDARD
06/03/2000

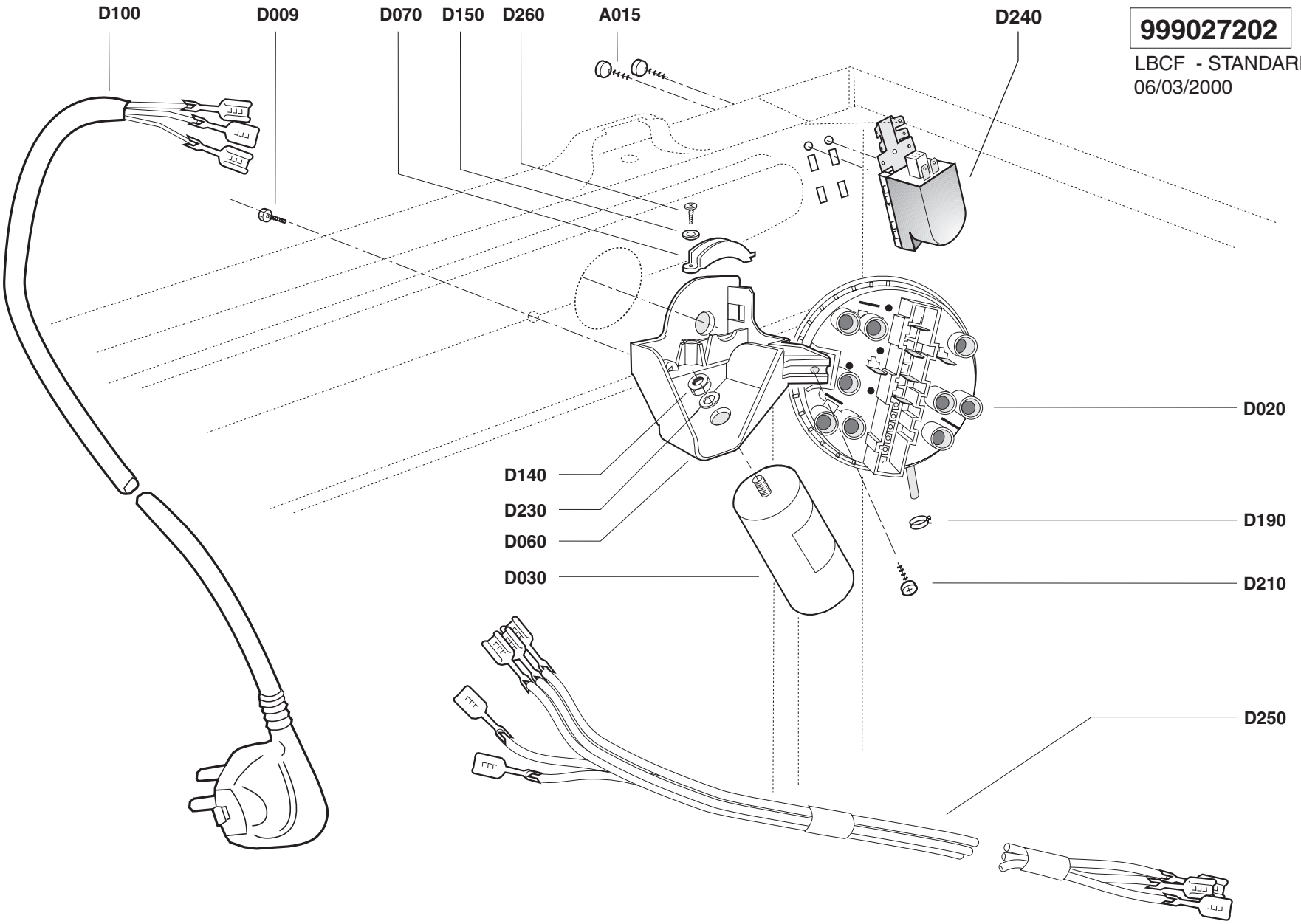

999016214

L.14A
L.15A
L.16
L.19
L.20
L.22

30/10/98

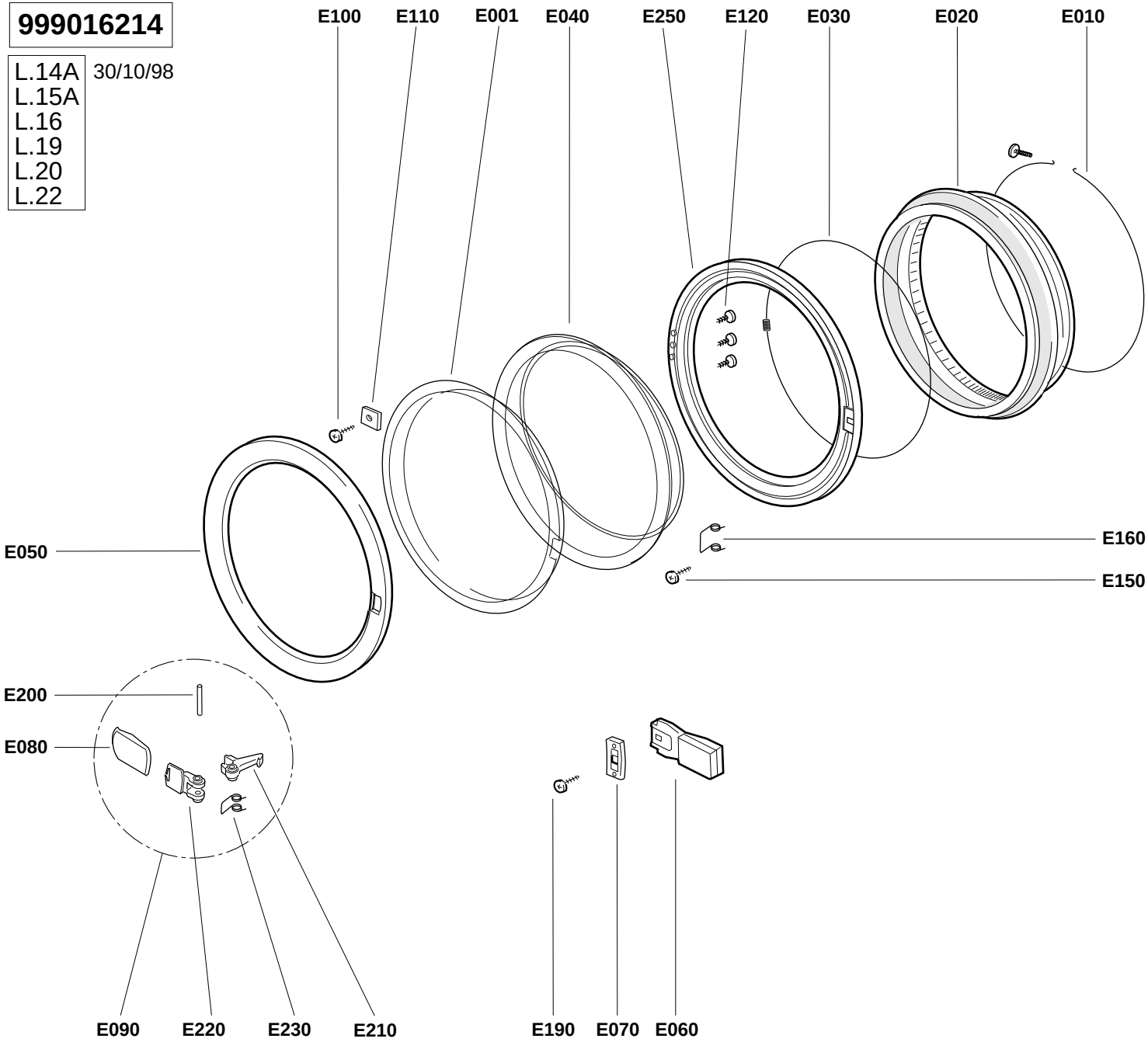

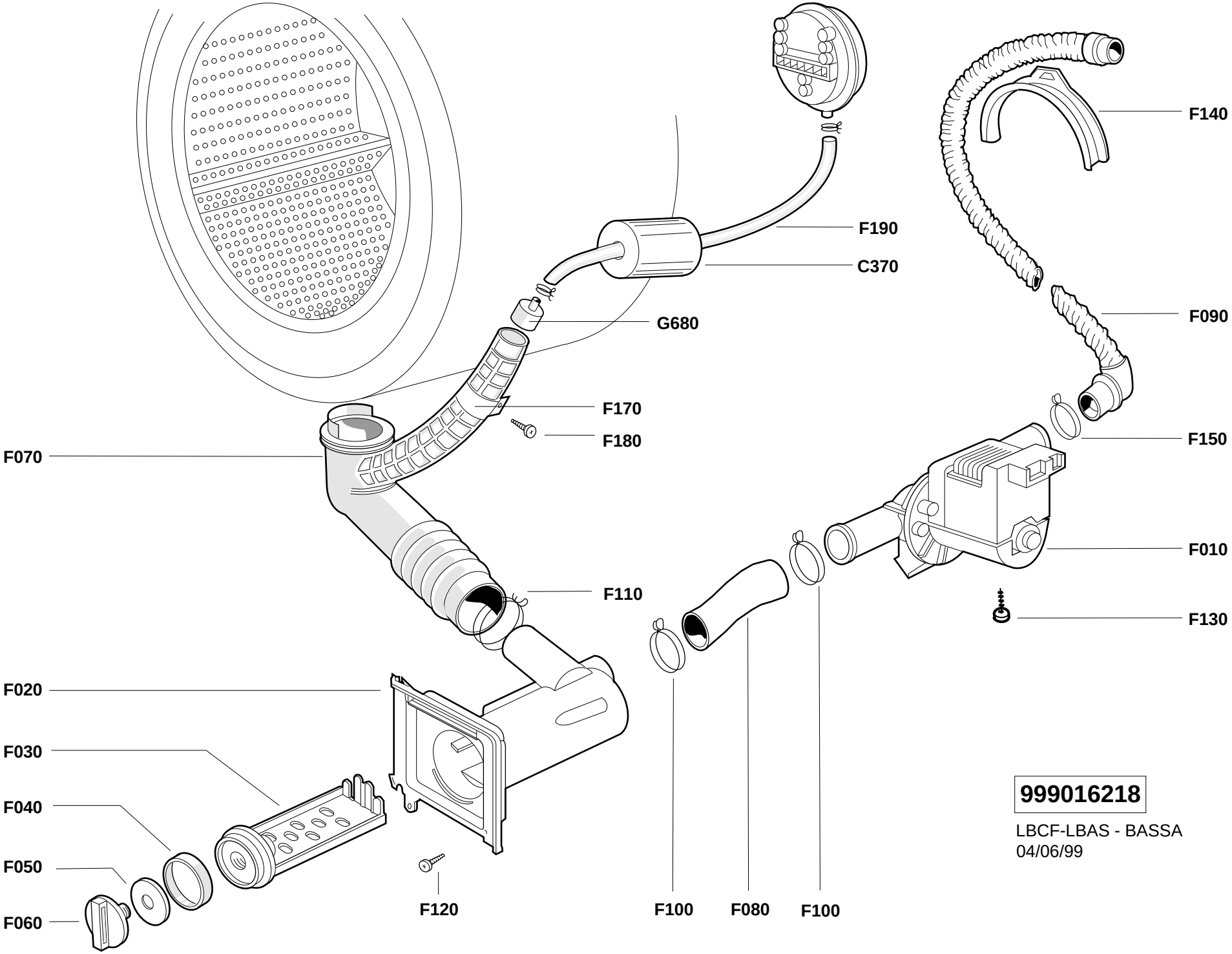

999016218

LBCF-LBAS - BASSA
04/06/99

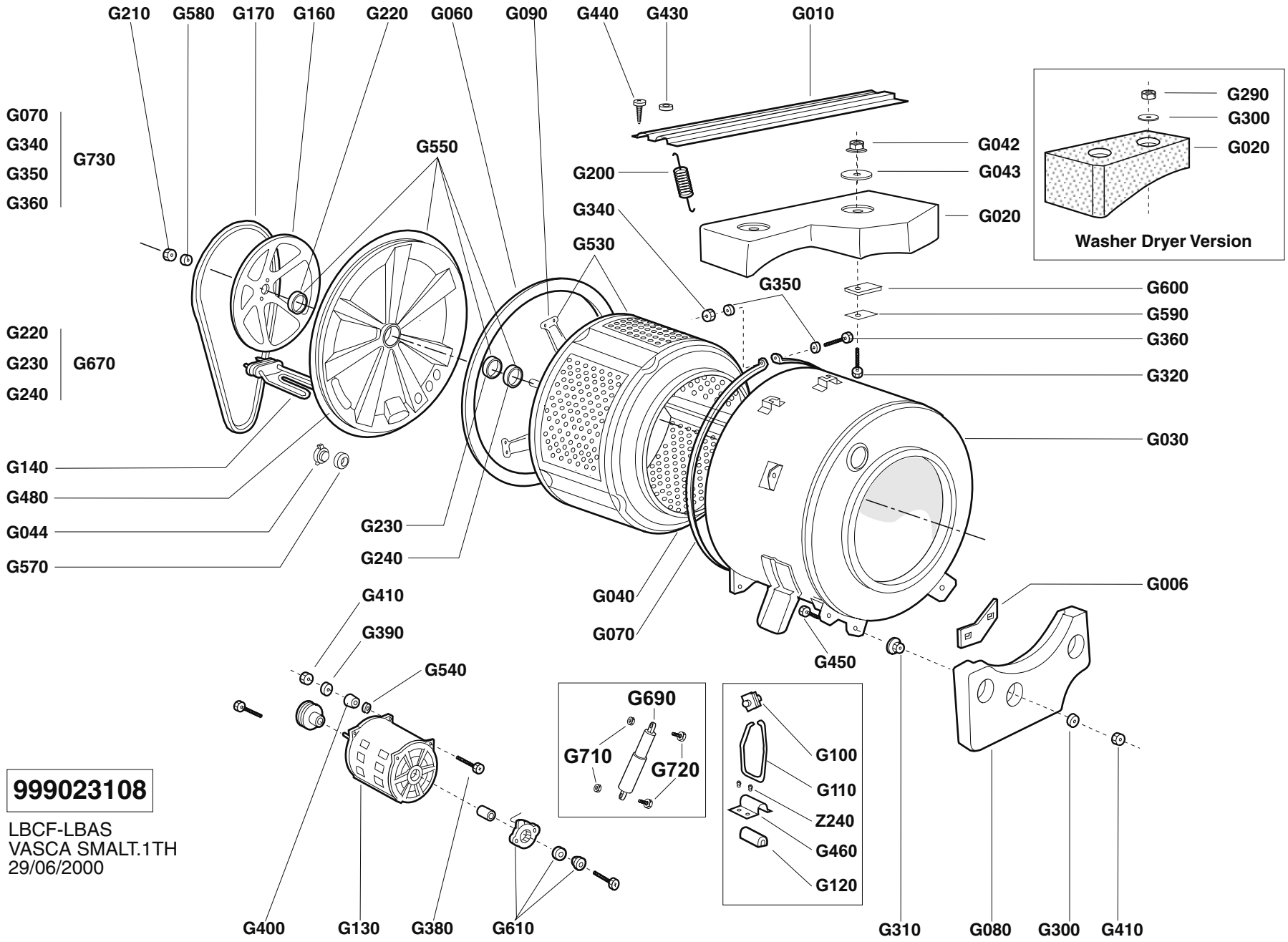

999023108

LBCF-LBAS
VASCA SMALT.1TH
29/06/2000