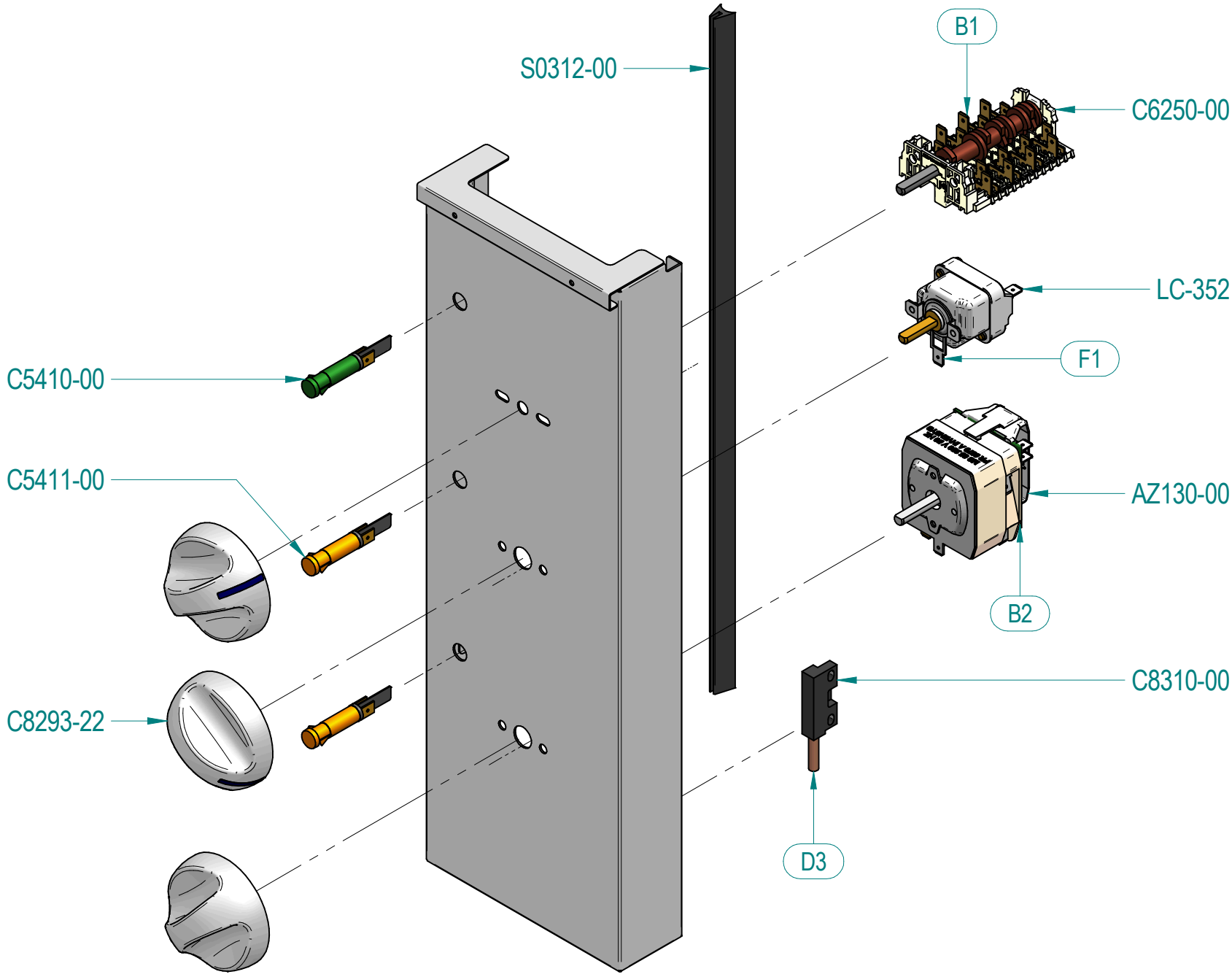
S0312-00
B1
C6250-00
LC-352
F1
C5410-00
C5411-00
AZ130-00
B2
C8293-22
C8310-00
D3

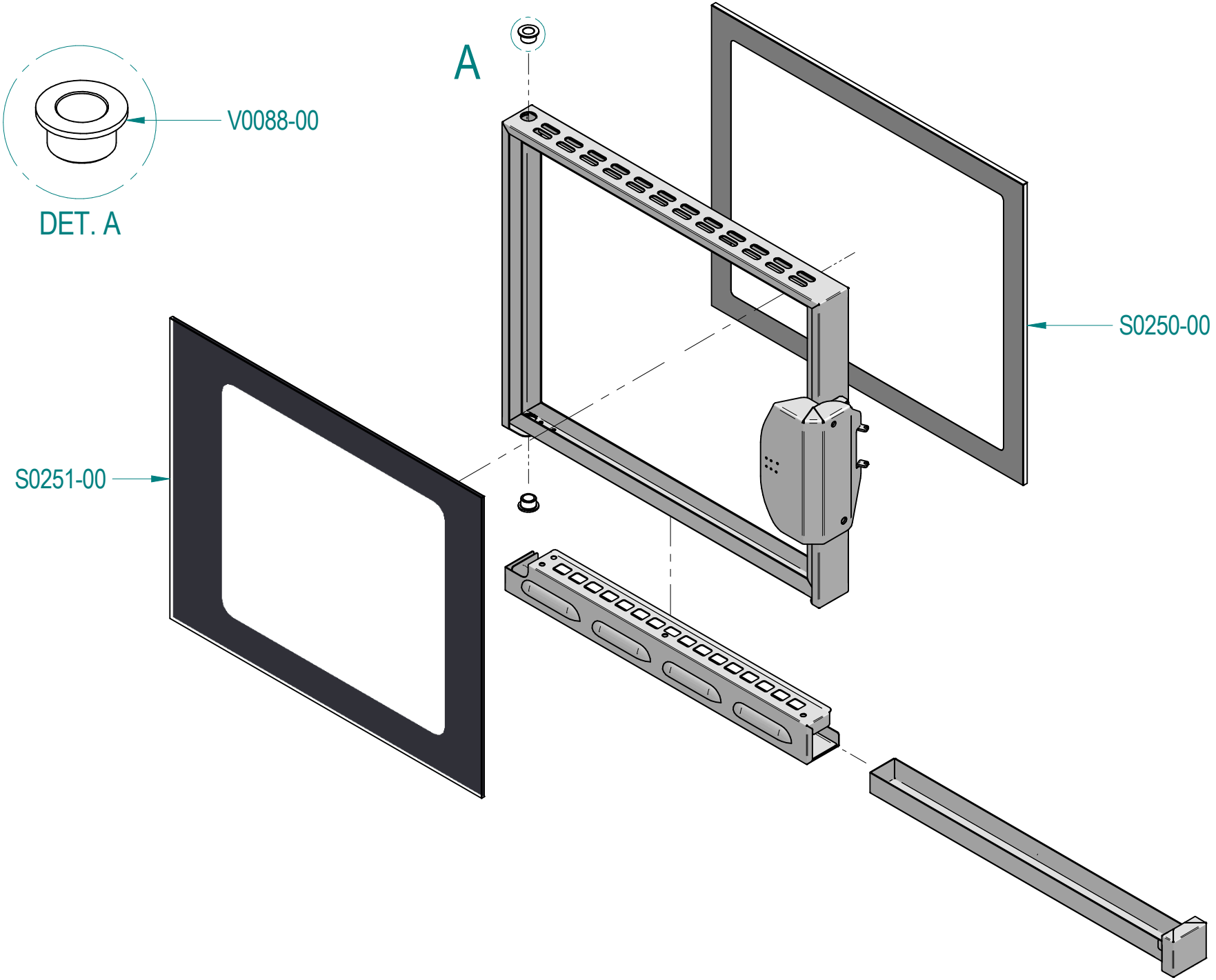
A
V0088-00
DET. A
S0250-00
S0251-00

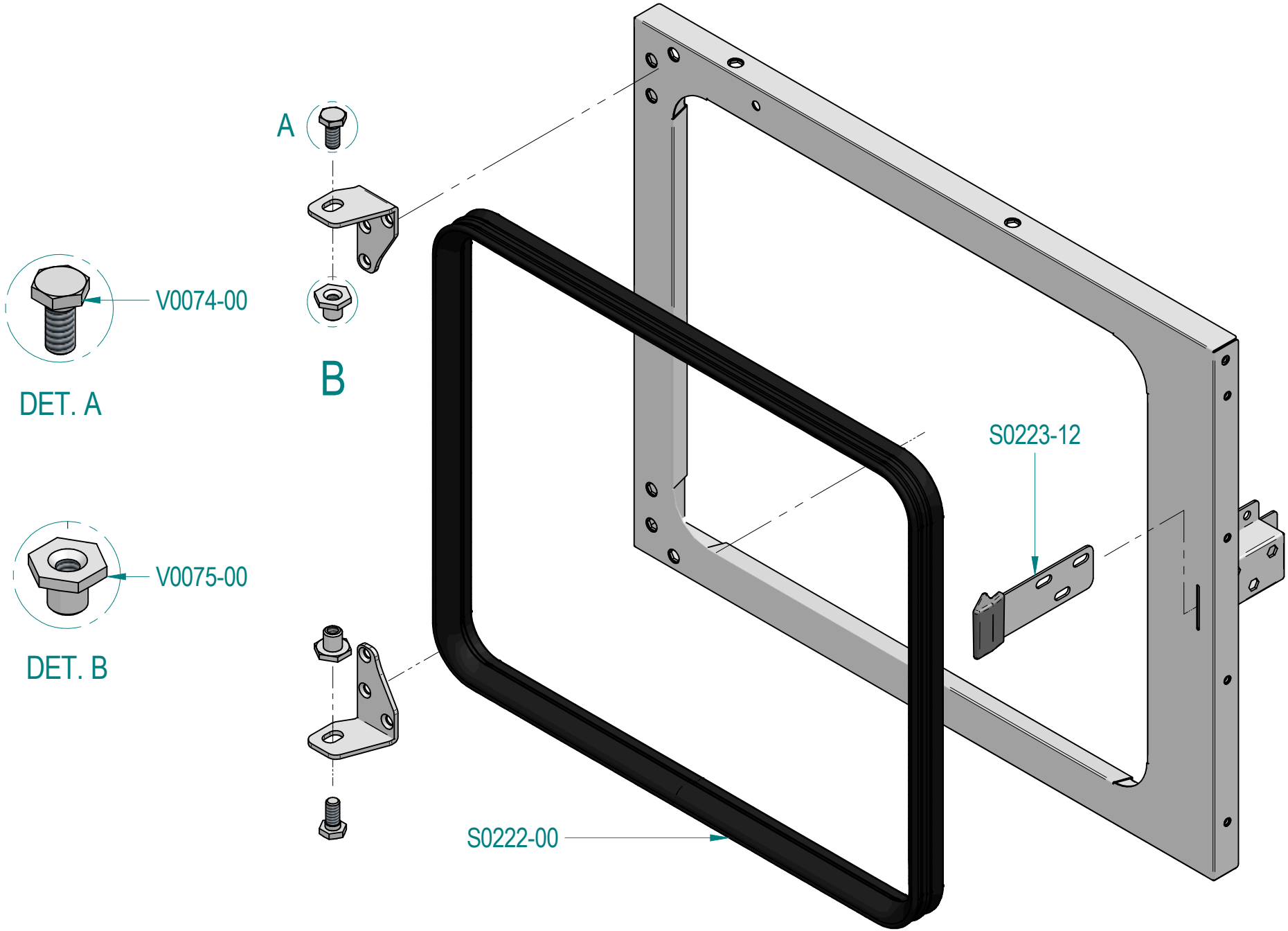
A
B
V0074-00
DET. A
V0075-00
DET. B
S0223-12
S0222-00

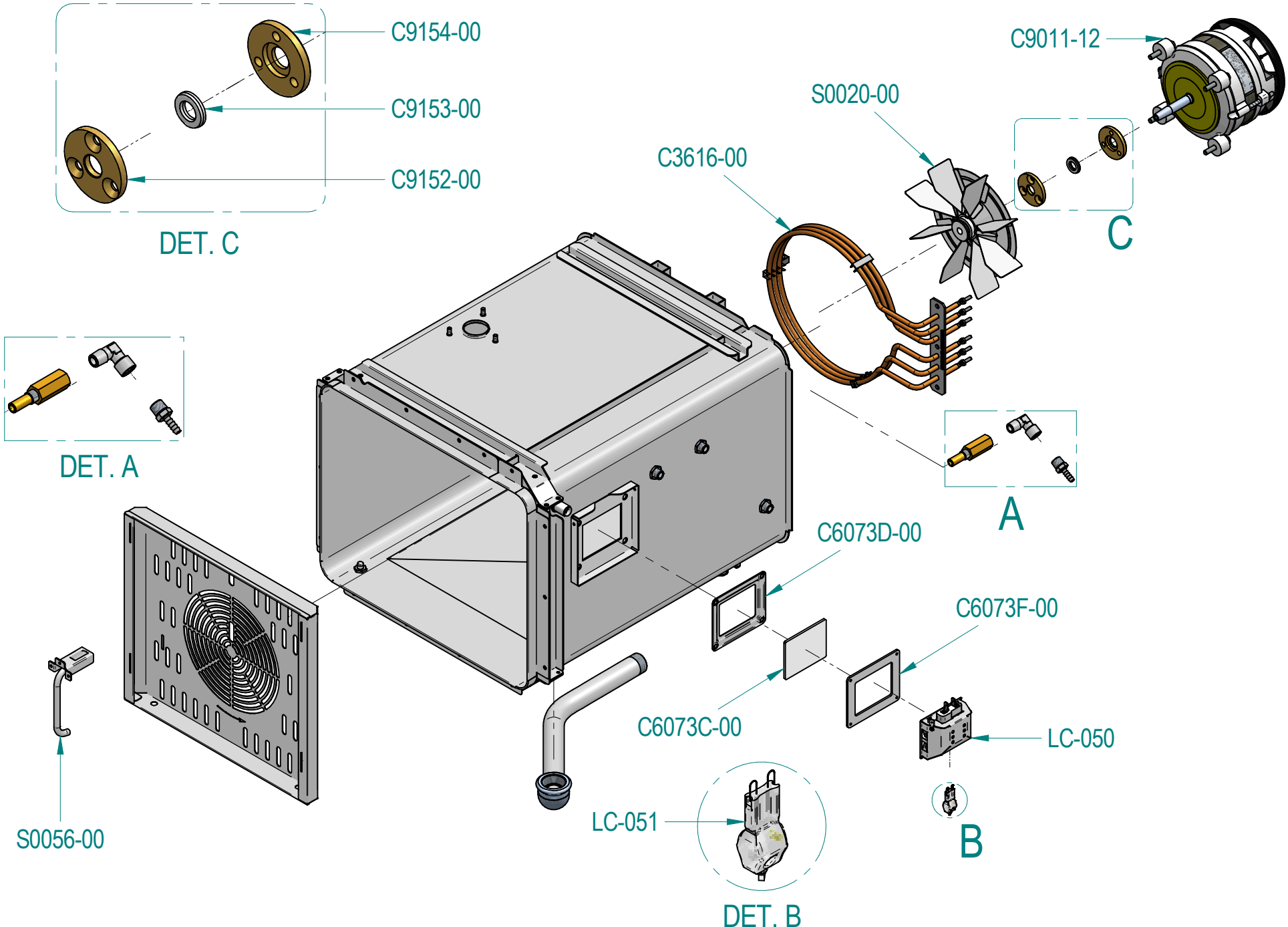
C9154-00
C9153-00
C9152-00
DET. C
C9011-12
S0020-00
C3616-00
C
DET. A
A
C6073D-00
C6073F-00
C6073C-00
LC-050
S0056-00
LC-051
B
DET. B

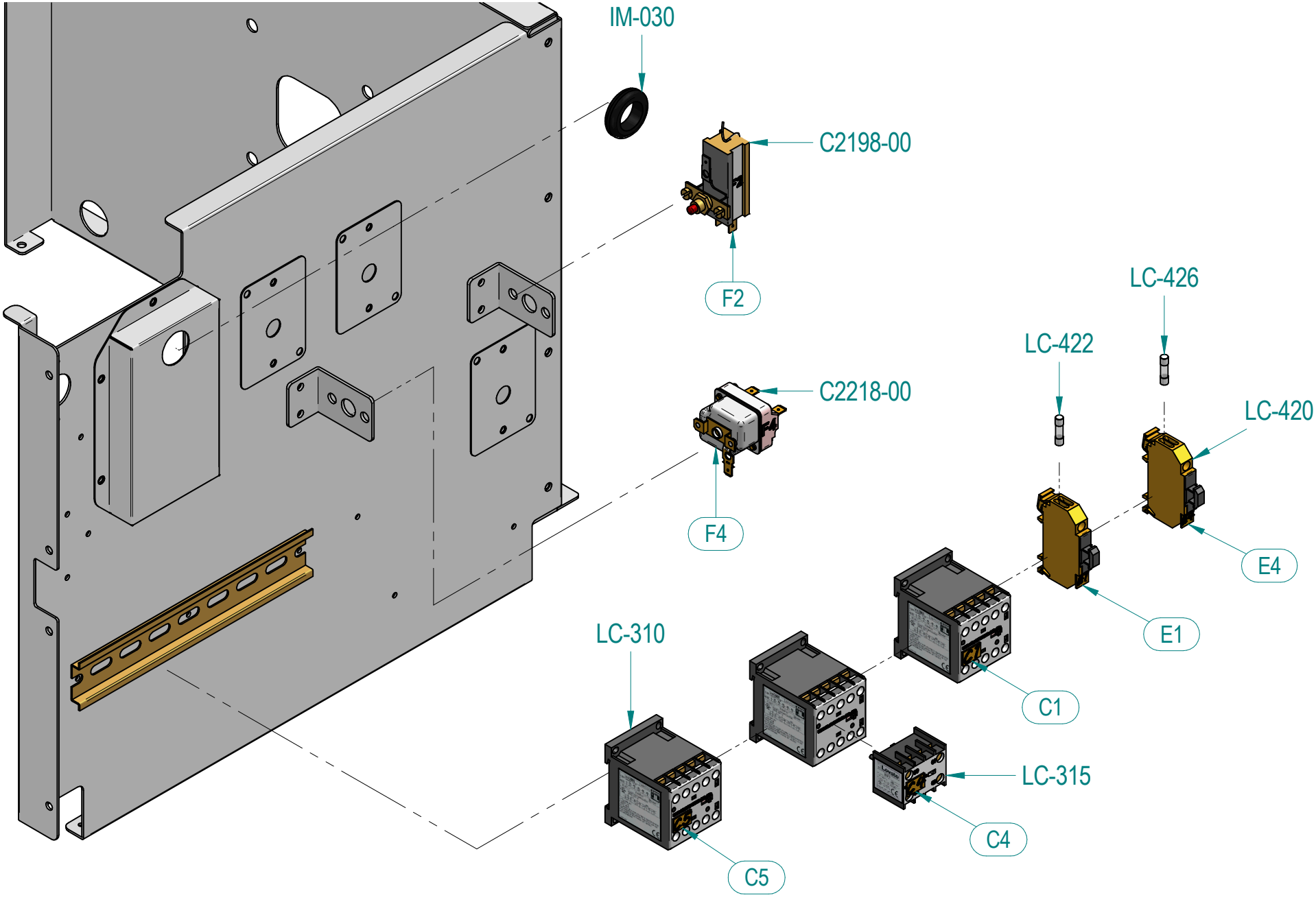
IM-030
C2198-00
F2
C2218-00
F4
LC-426
LC-422
LC-420
E4
E1
C1
LC-310
LC-315
C4
C5

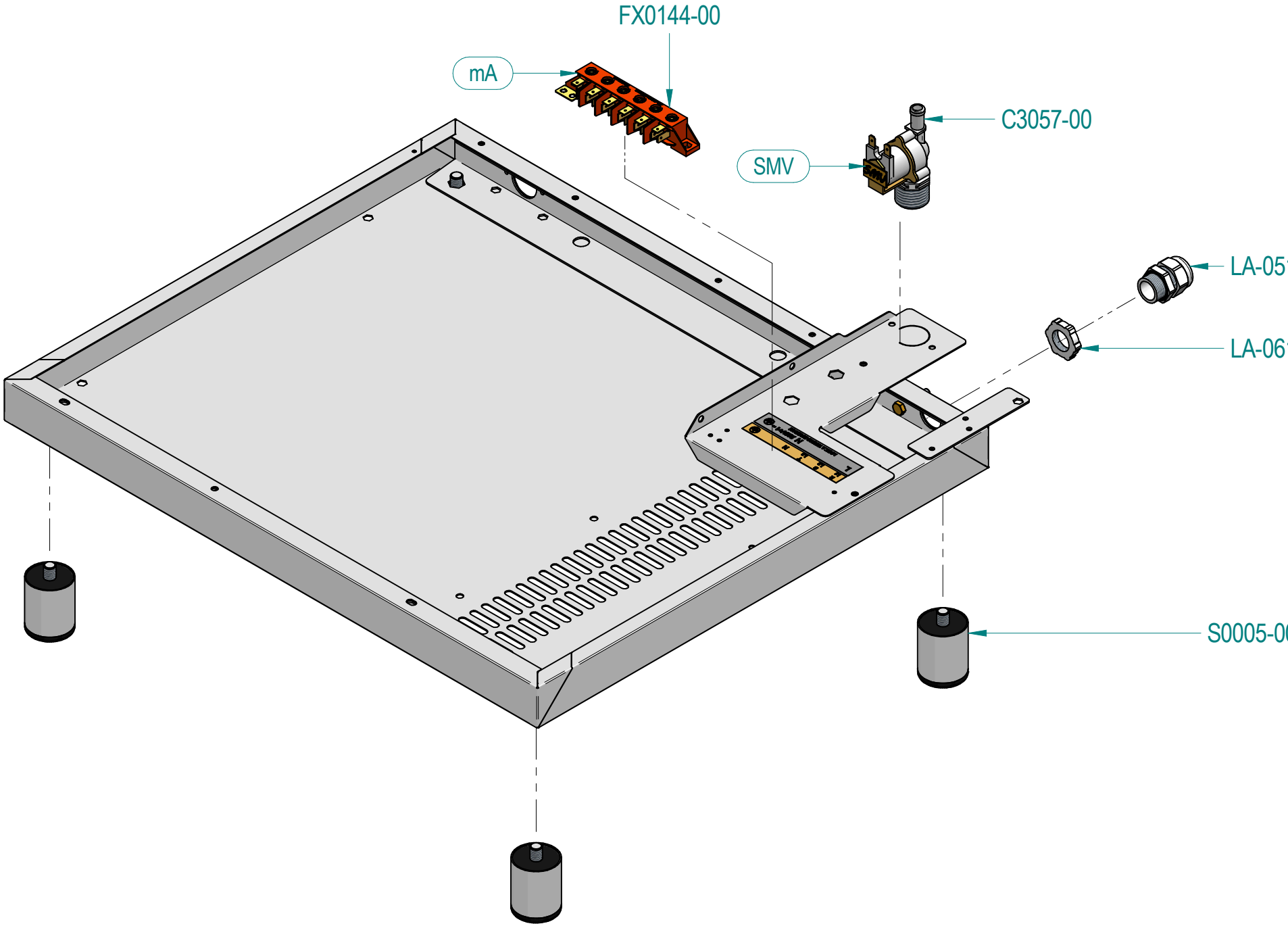
FX0144-00
mA
C3057-00
SMV
LA-051
LA-061
S0005-00