VUE A

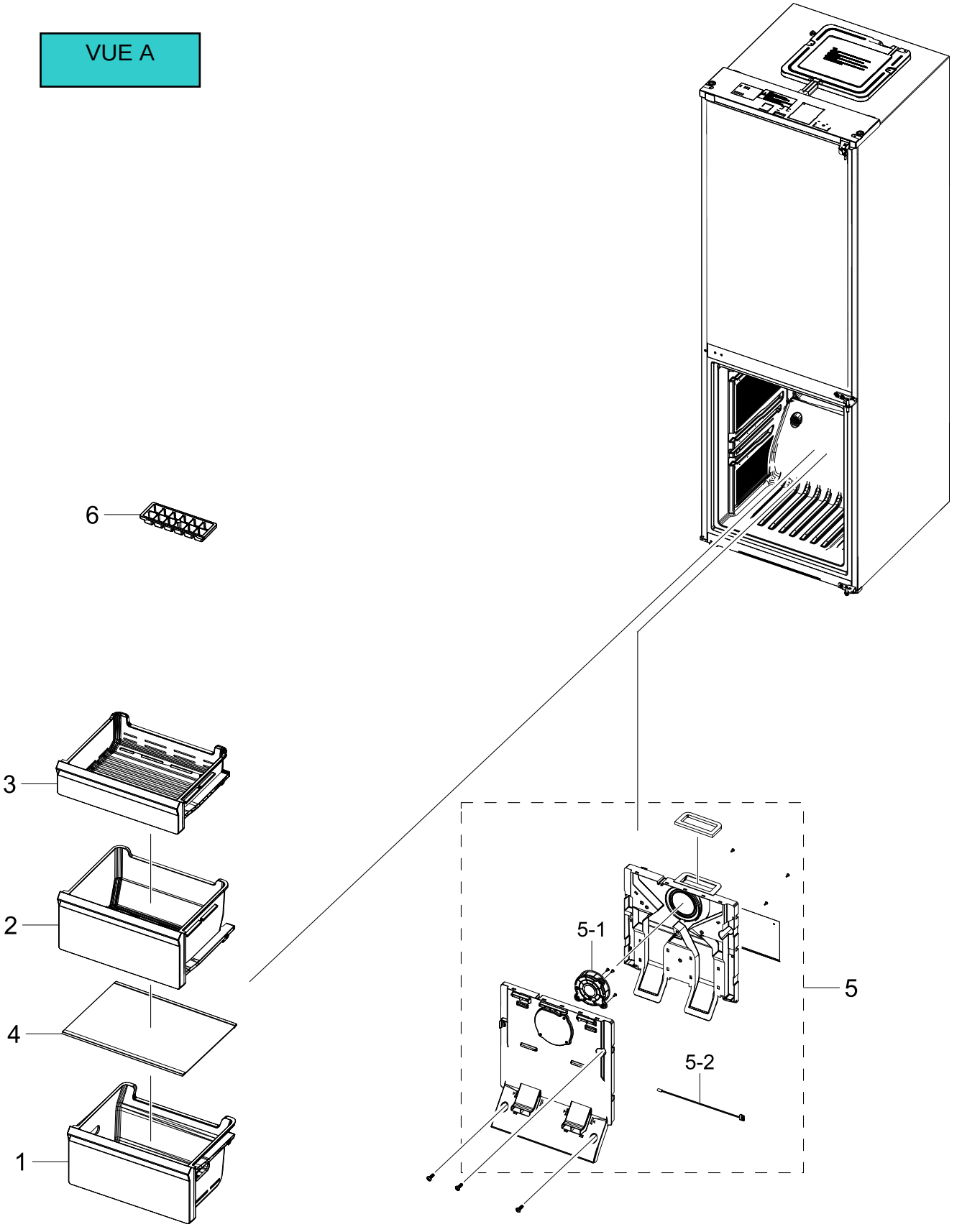

VUE B

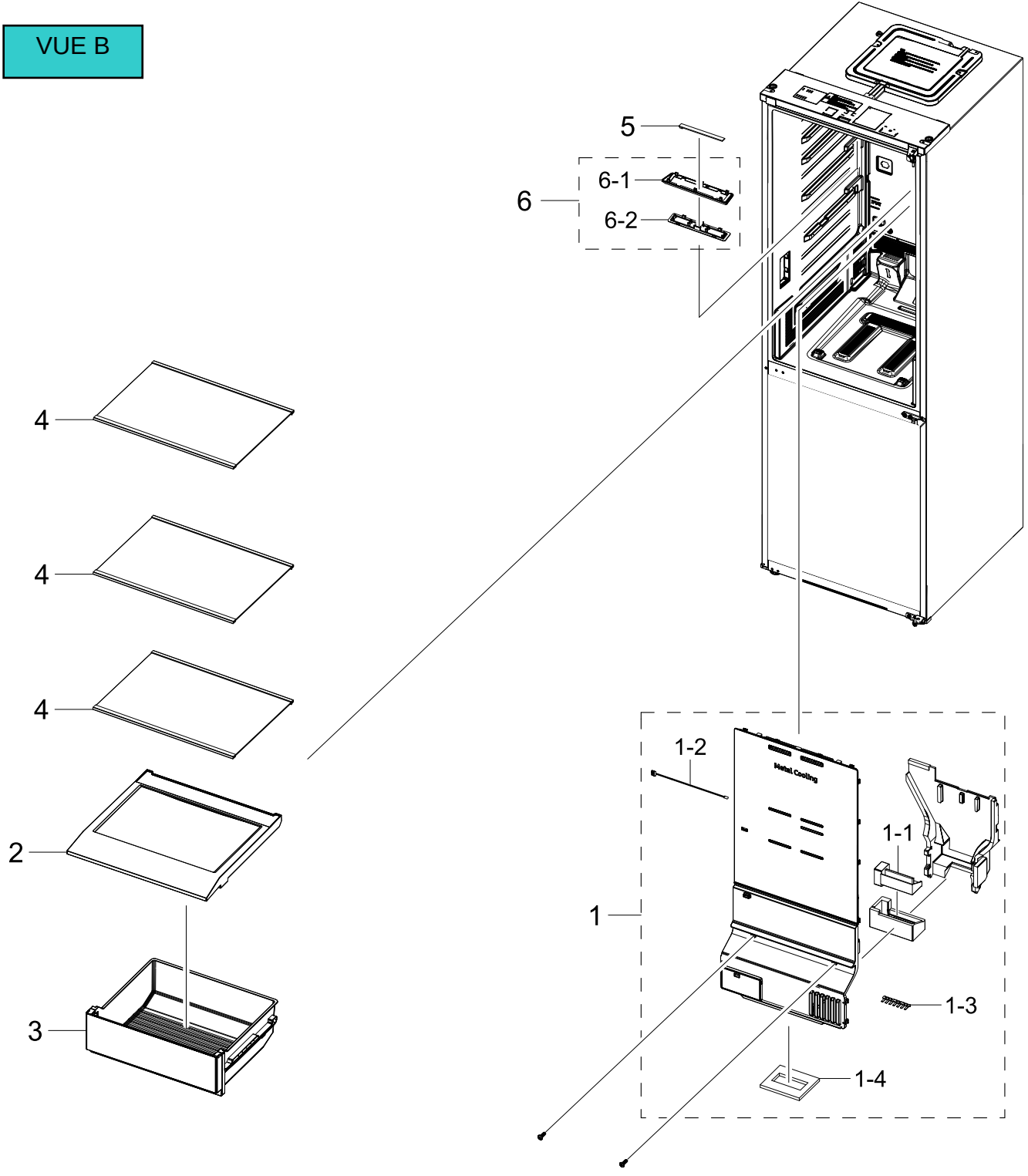

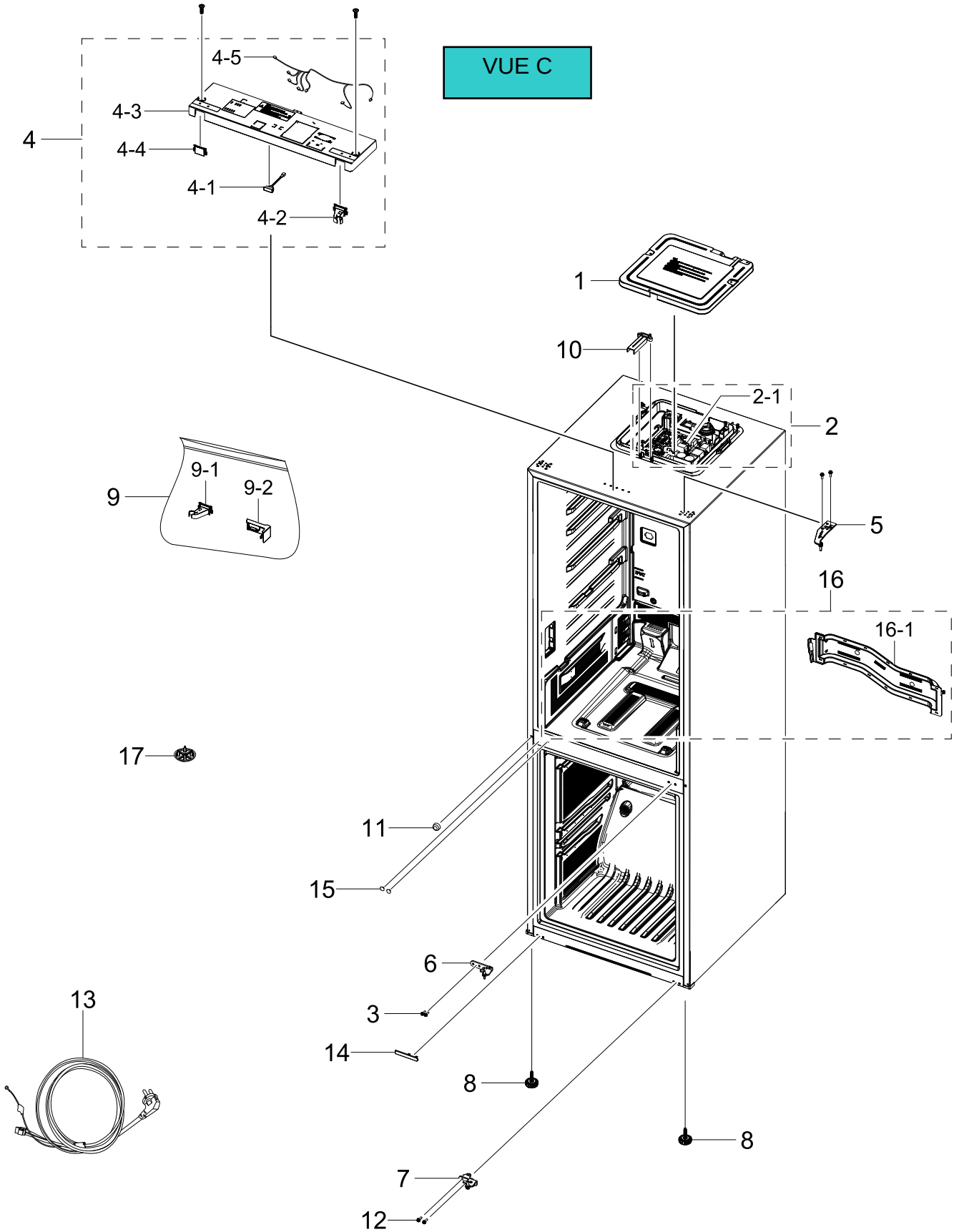
VUE C
4-5
4-3
4
4-4
4-1
4-2
1
10
2-1
2
9-1
9-2
9
5
16
16-1
17
11
15
6
3
14
8
13
8
7
12

VUE D

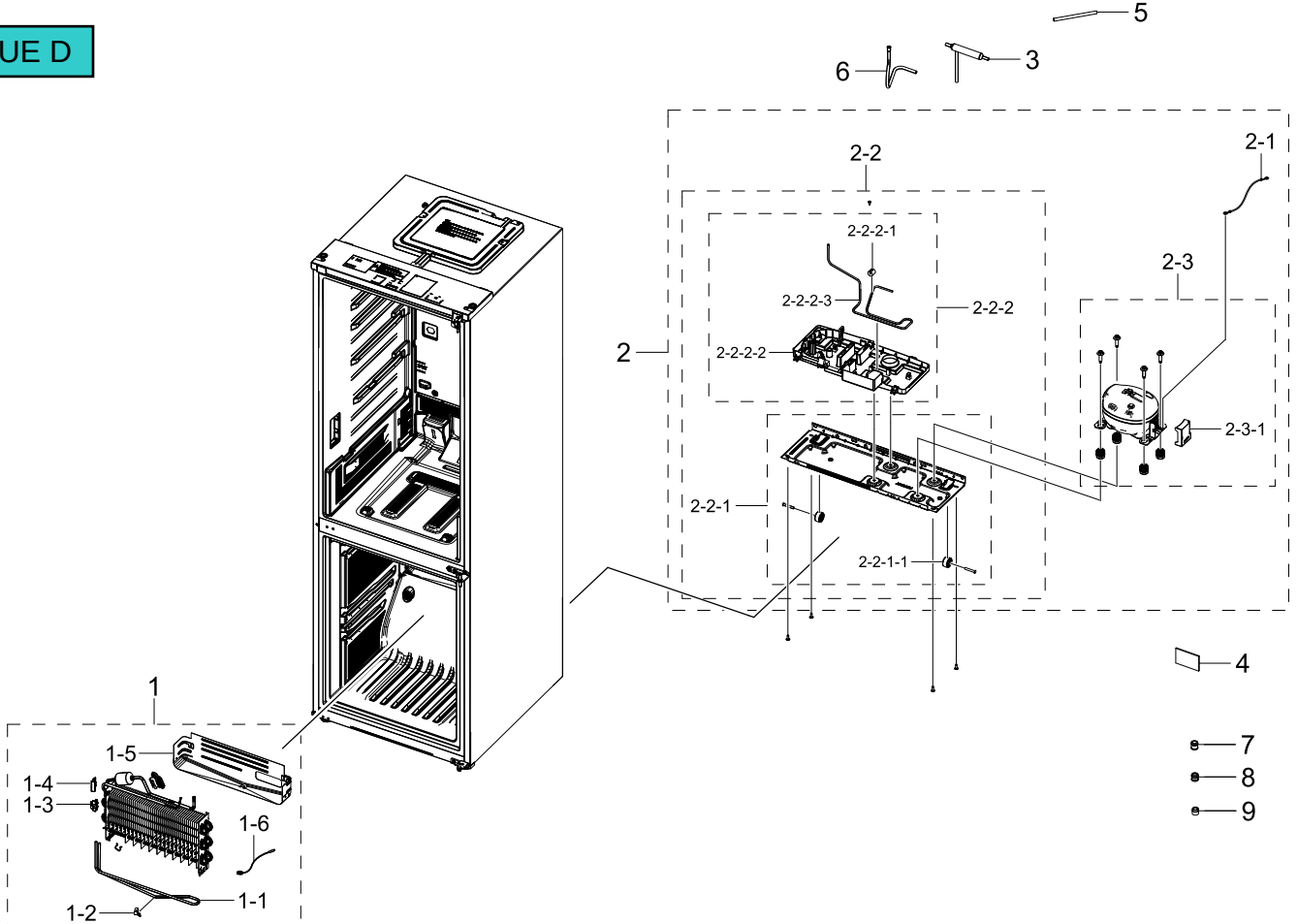
5
6
3
2-2
2-1
2-2-2-1
2-3
2-2-2-3
2-2-2
2
2-2-2-2
2-3-1
2-2-1
2-2-1-1
4
1
1-5
1-4
1-3
1-6
1-2
1-1
7
8
9

VUE E

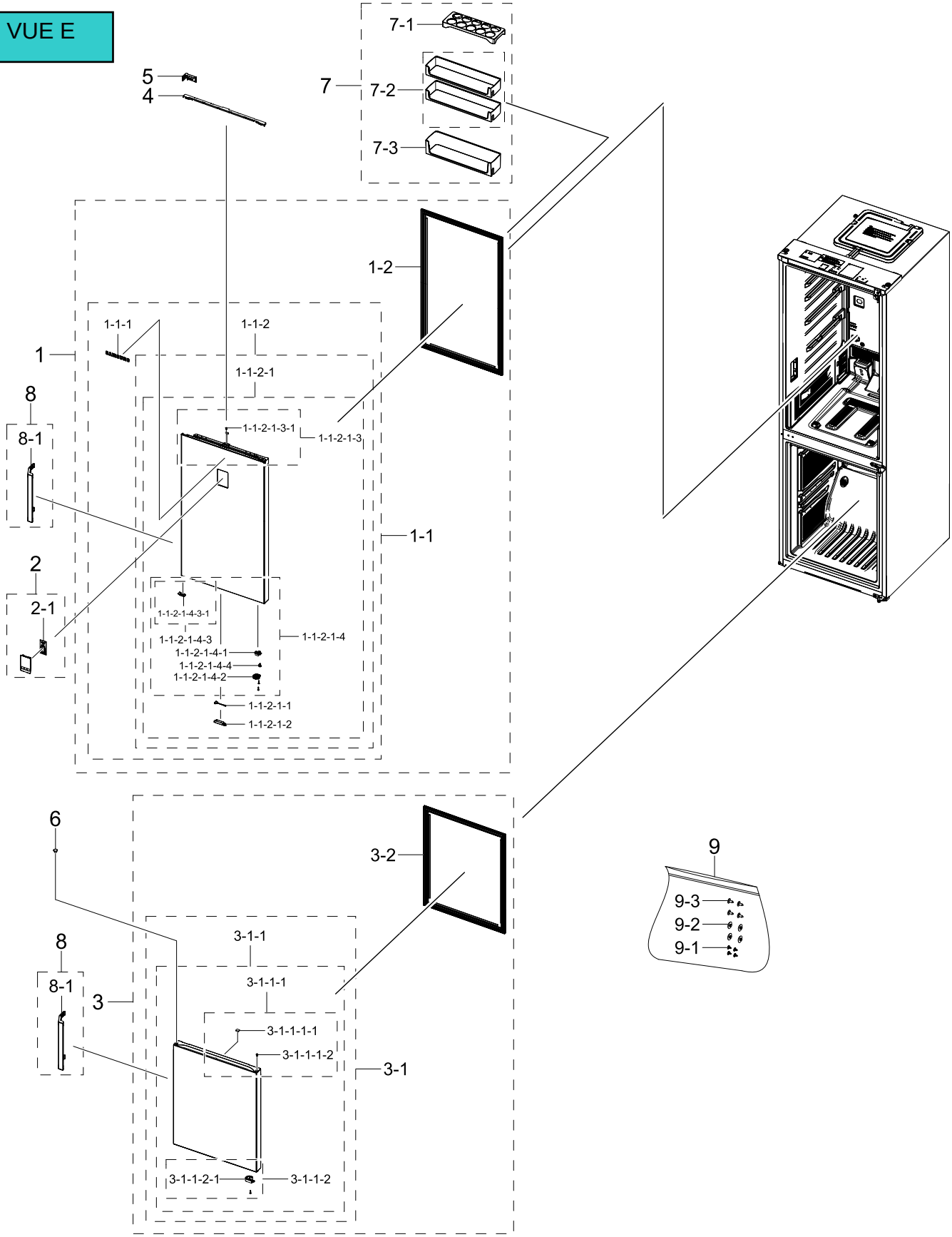
7-1
7
7-2
7-3
5
4
1-2
1-1-1
1-1-2
1
1-1-2-1
8
8-1
1-1-2-1-3-1
1-1-2-1-3
1-1
2
2-1
1-1-2-1-4-3-1
1-1-2-1-4-3
1-1-2-1-4
1-1-2-1-4-1
1-1-2-1-4-4
1-1-2-1-4-2
1-1-2-1-1
1-1-2-1-2
6
3-2
9
9-3
9-2
9-1
8
8-1
3-1-1
3
3-1-1-1
3-1-1-1-1
3-1-1-1-2
3-1
3-1-1-2-1
3-1-1-2