VUE A

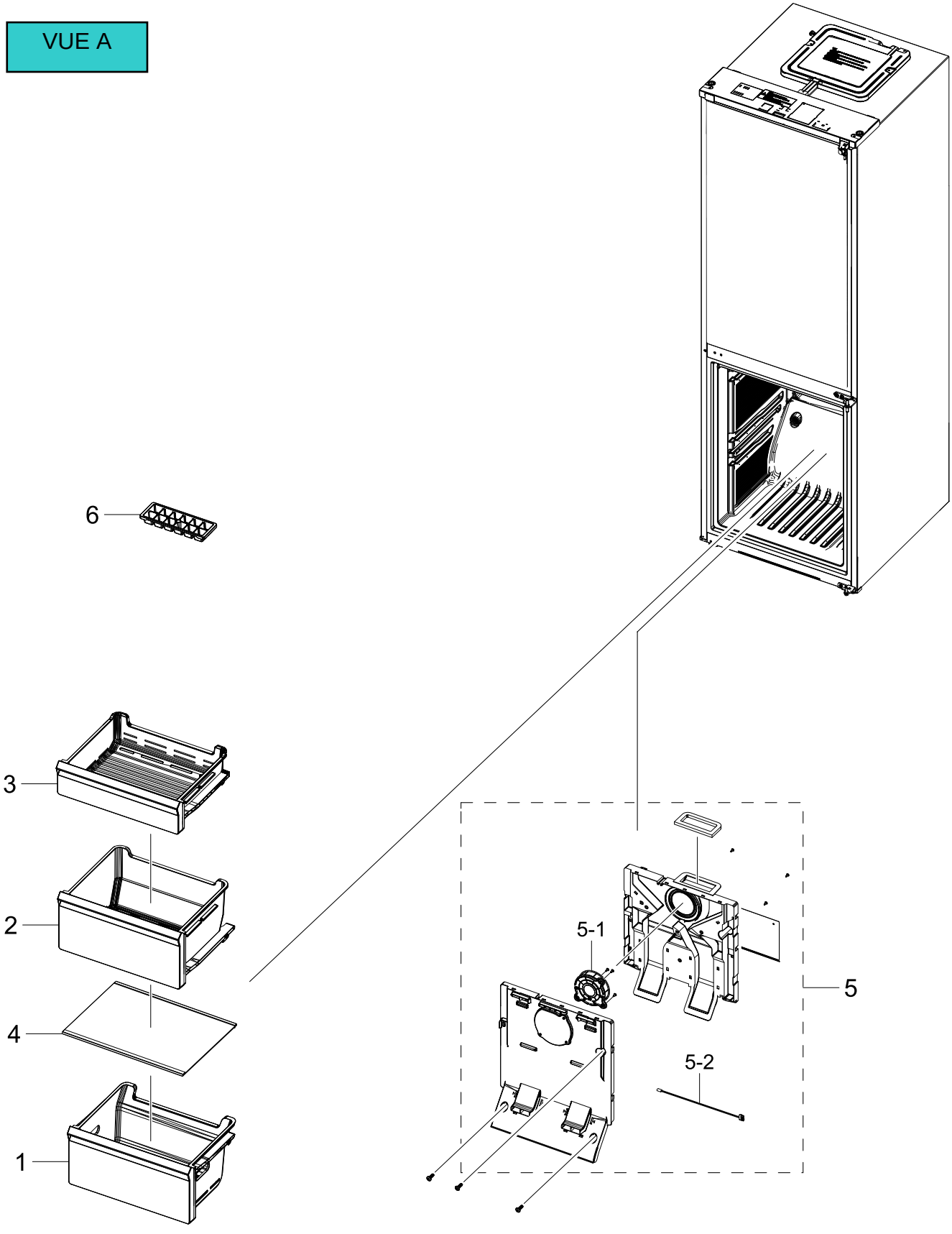

VUE B

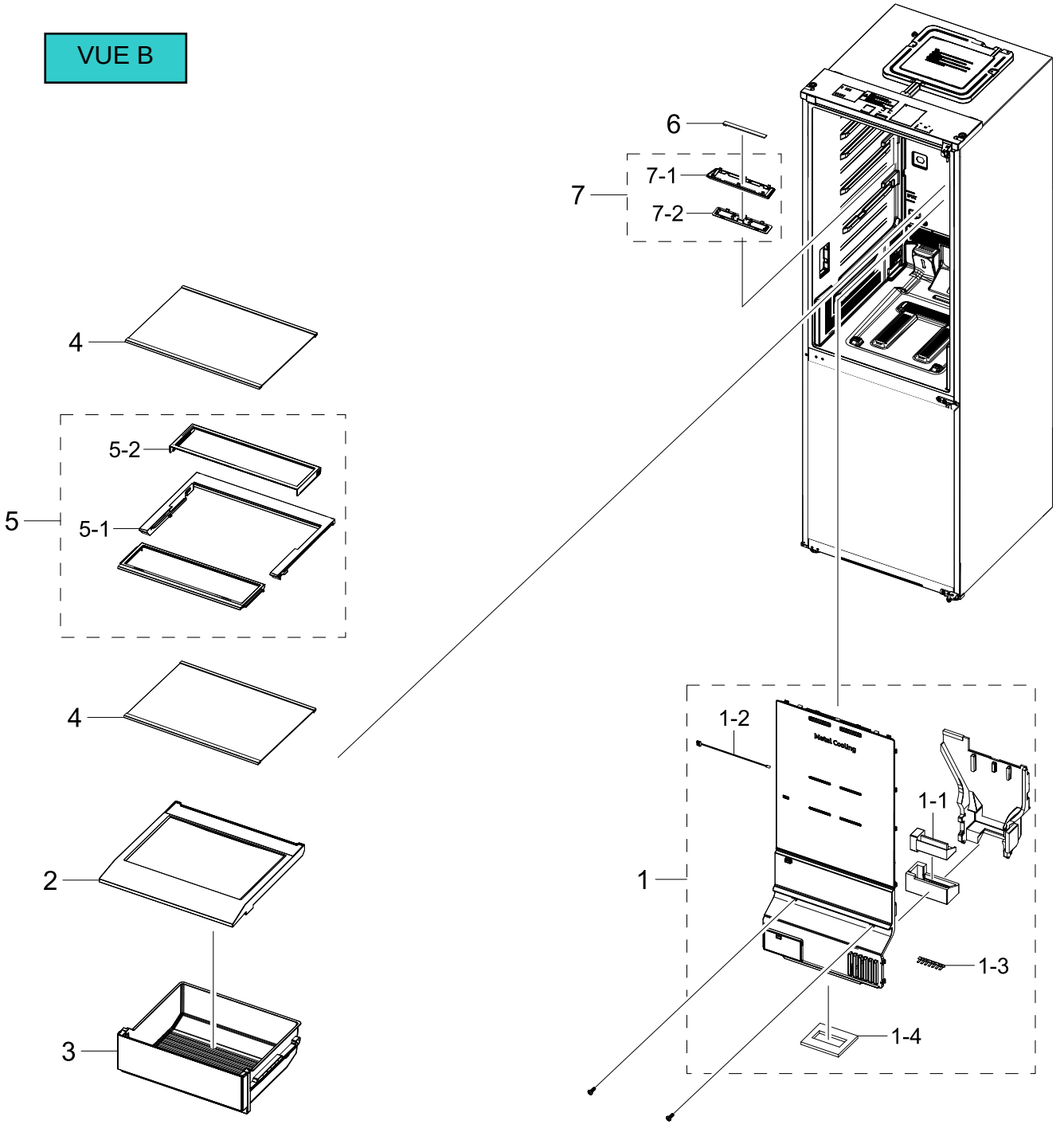

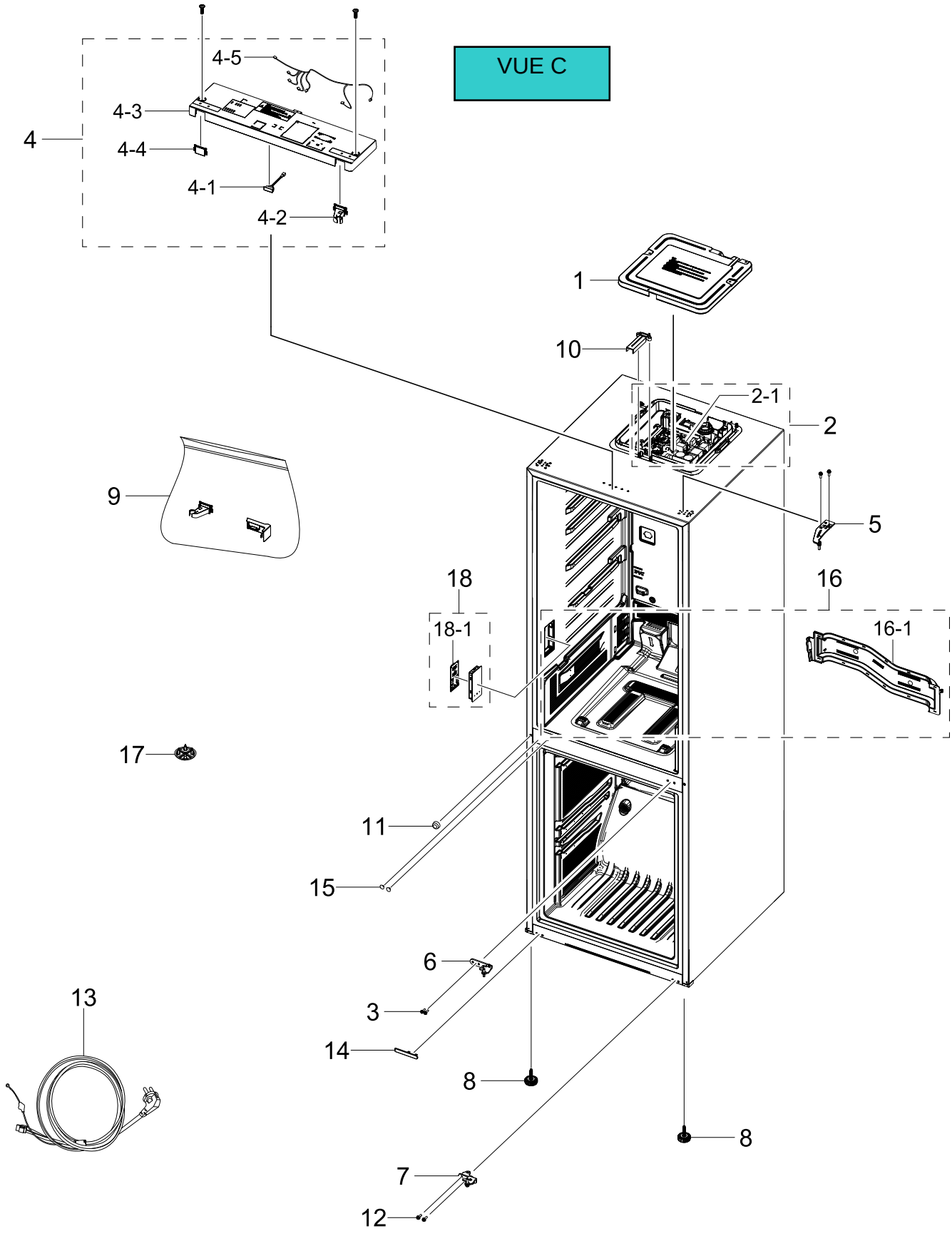
VUE C
4
4-5
4-3
4-4
4-1
4-2
1
10
2-1
2
9
5
18
18-1
16
16-1
17
11
15
6
3
14
13
8
8
7
12

VUE D

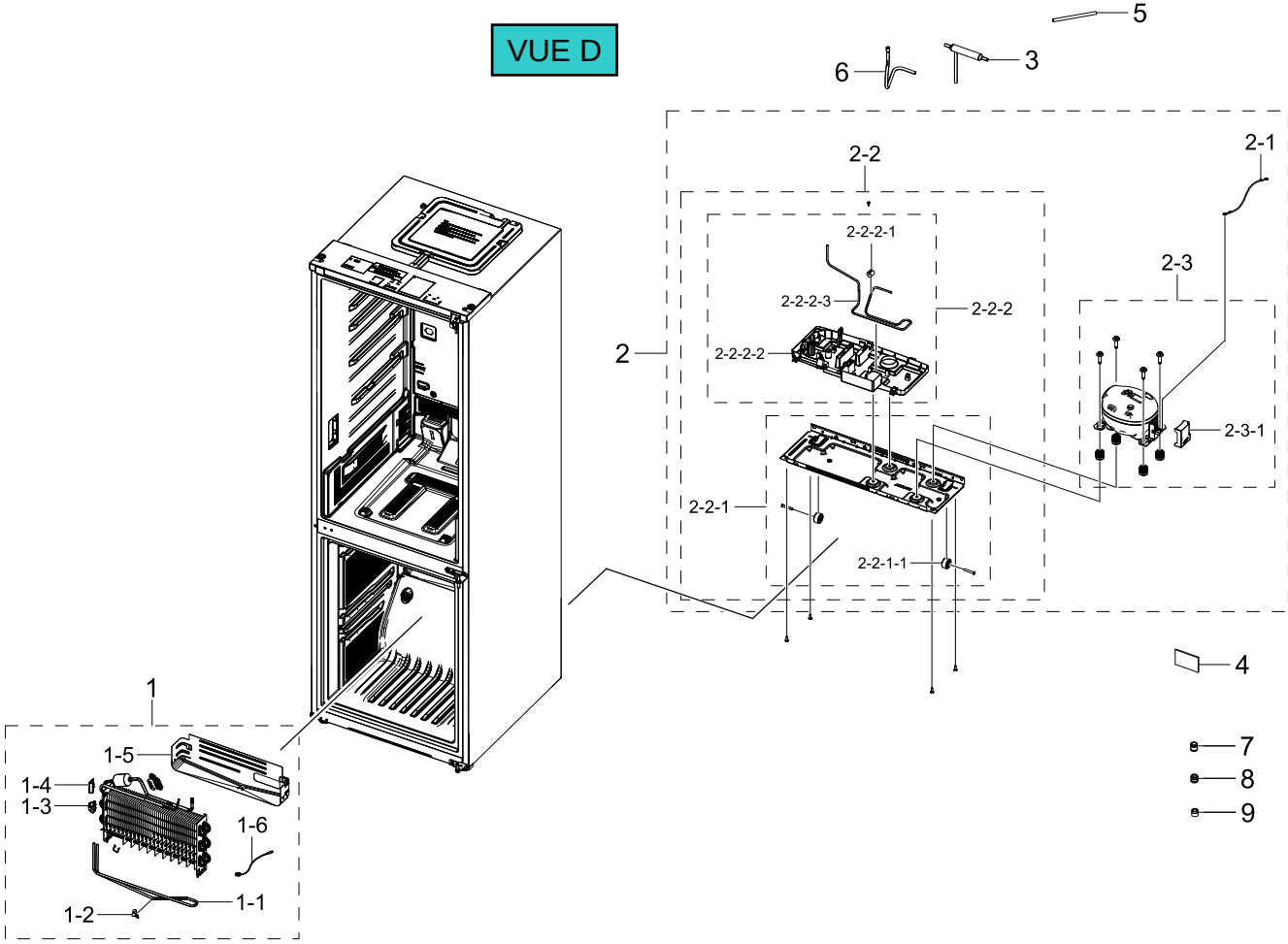
5
6
3
2-2
2-1
2-2-2-1
2-3
2-2-2-3
2-2-2
2
2-2-2-2
2-3-1
2-2-1
2-2-1-1
4
1
1-5
1-4
1-3
1-6
1-2
1-1
7
8
9

VUE E

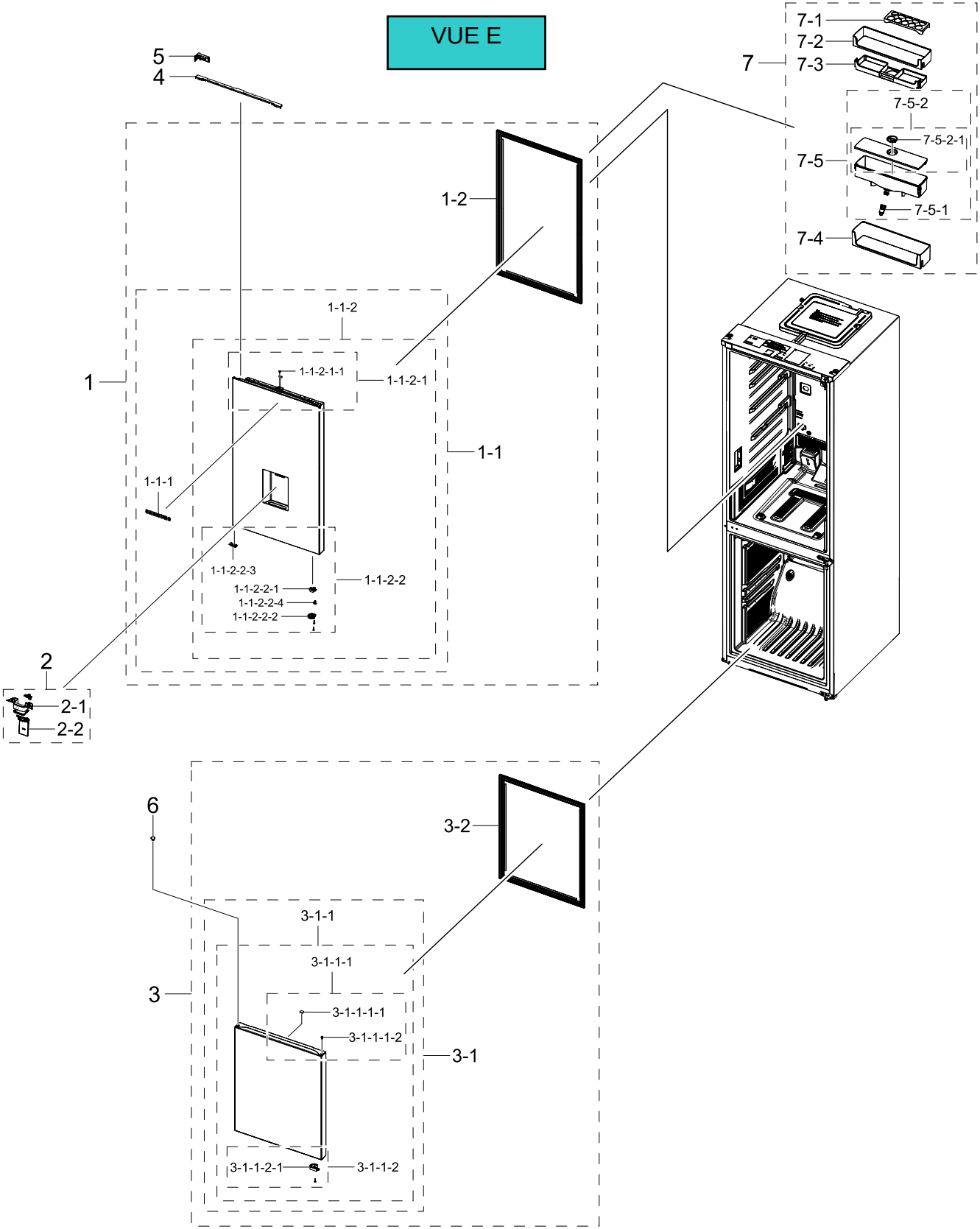
5
4
7
7-1
7-2
7-3
7-5-2
7-5-2-1
7-5
7-5-1
7-4
1-2
1-1-2
1-1-2-1-1
1-1-2-1
1
1-1
1-1-1
1-1-2-2-3
1-1-2-2-1
1-1-2-2-4
1-1-2-2-2
1-1-2-2
2
2-1
2-2
6
3-2
3-1-1
3-1-1-1
3
3-1-1-1-1
3-1-1-1-2
3-1
3-1-1-2-1
3-1-1-2