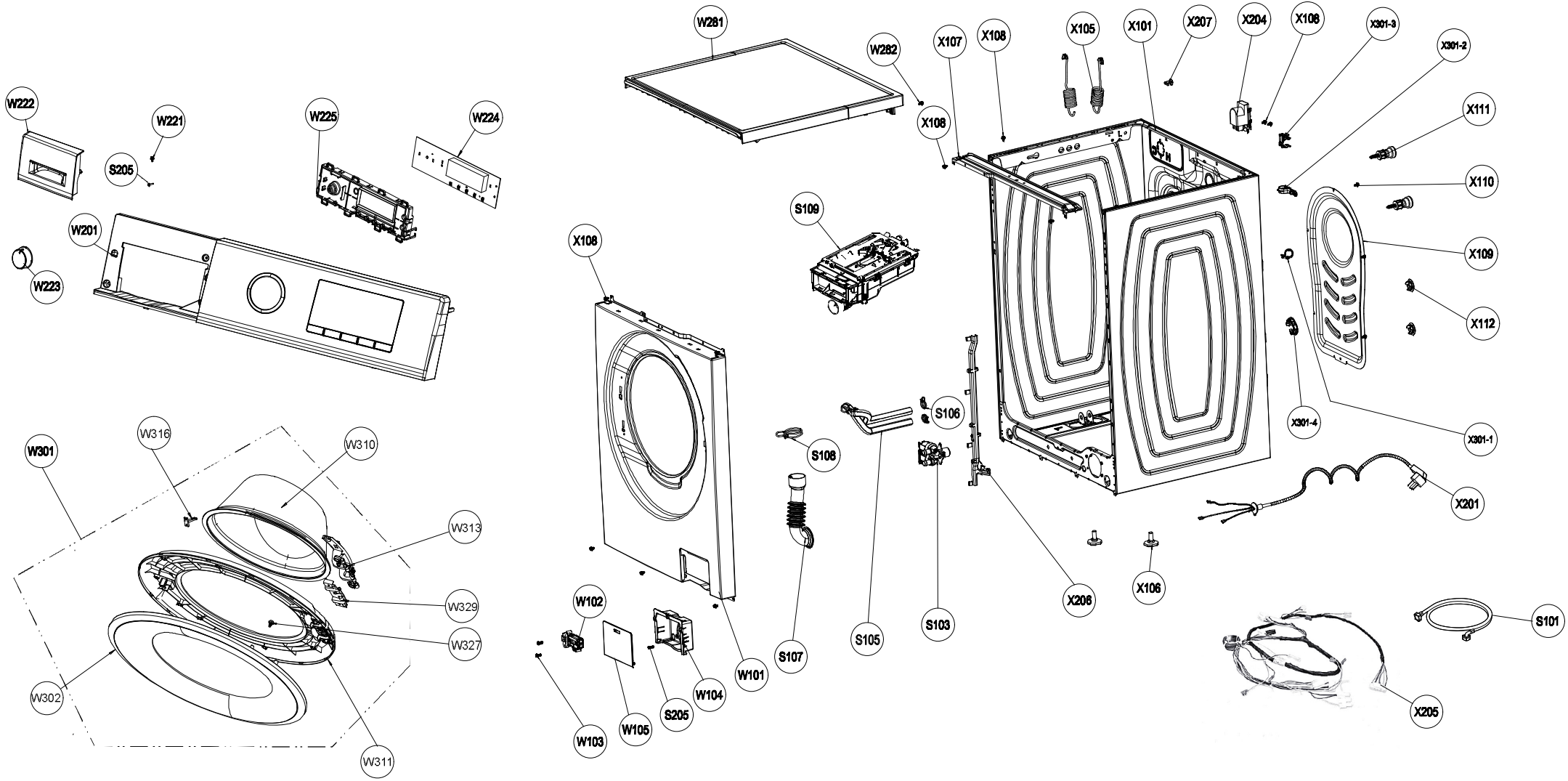
W222
W221
S205
W225
W224
W201
W223
W281
W282
X107
X108
X108
X105
X101
X207
X204
X108
X301-3
X301-2
X111
X110
X109
X112
X301-4
X301-1
X201
X206
X106
S109
X108
S106
S108
S105
S103
S107
W101
W102
W103
W105
S205
W104
S101
X205
W301
W316
W310
W313
W329
W327
W302
W311

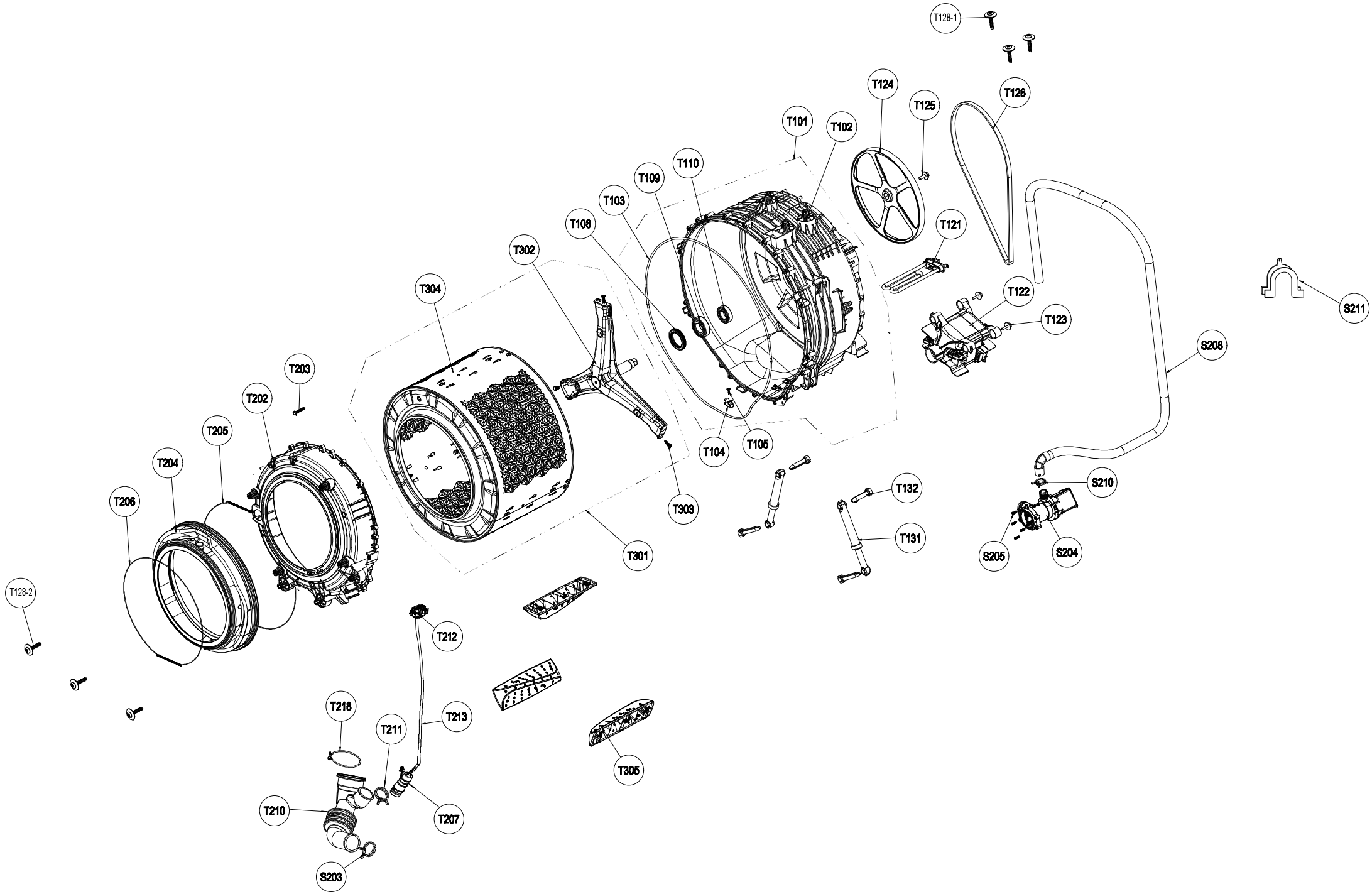
T128-1
T124
T125
T126
T101
T102
T110
T109
T103
T108
T121
T302
T304
T122
T123
S211
S208
T203
T202
T205
T204
T206
T104
T105
T303
T301
T132
T131
S210
S205
S204
T128-2
T212
T218
T211
T213
T305
T210
T207
S203